SG250HX-V112-UEN-Ver10-202003

# SG250HX

# PV Grid-Connected Inverter

# User Manual

SUNGROW

# All Rights Reserved


### All Rights Reserved

No part of this document can be reproduced in any form or by any means without the prior written permission of Sungrow Power Supply Co., Ltd(hereinafter "SUNGROW").

### Trademarks

SUNGROW and other Sungrow trademarks used in this manual are owned by Sungrow Power Supply Co., Ltd.

All other trademarks or registered trademarks mentioned in this document are owned by their respective owners.

### Software Licenses

- It is prohibited to use data contained in firmware or software developed by SUNGROW, in part or in full, for commercial purposes by any means.
- It is prohibited to perform reverse engineering, cracking, or any other operations that compromise the original program design of the software developed by SUNGROW.



Sungrow Power Supply Co., Ltd.

Address: **No.1699 Xiyou Rd., New & High Tech Zone, Hefei, 230088, China.**

Email: **info@sungrow.cn**

Tel: +86 551 6532 7834

Website: **www.sungrowpower.com**

# About This Manual

The manual mainly describes the product information, guidelines for installation, operation and maintenance. The manual cannot include complete information about the photovoltaic (PV) system. You can get additional information about other devices at **www. sungrowpower. com** or on the webpage of the respective component manufacturer.

### Validity

This manual is valid for the following inverter types:

- SG250HX

They will be referred to as "inverter" hereinafter unless otherwise specified.

### Target Group

This manual is intended for:

- qualified personnel who are responsible for the installation and commissioning of the inverter; and
- inverter owners who will have the ability to interact with the inverter.

### How to Use This Manual

Read the manual and other related documents before performing any work on the inverter is carried out. Documents must be stored carefully and be available at all times.

The contents of the manual will be periodically updated or revised due to the product development. It is probably that there are changes of manual in the subsequent inverter edition. The latest manual can be acquired via visiting the website at **www. sungrowpower.com**.

### Symbols

Important instructions contained in this manual should be followed during installation, operation and maintenance of the inverter. They will be highlighted by the following symbols.

| Symbol | Explanation |
|---|---|
| DANGER | Indicates a hazard with a high level of risk that, if not avoided, will result in death or serious injury. |
| WARNING | Indicates a hazard with a medium level of risk that, if not avoided, could result in death or serious injury. |
| CAUTION | Indicates a hazard with a low level of risk that, if not avoided, could result in minor or moderate injury. |

| Symbol | Explanation |
| --- | --- |
| NOTICE | Indicates a situation that, if not avoided, could result in equipment or property damage. |
| | Indicates additional information, emphasized contents or tips that may be helpful, e.g. to help you solve problems or save time. |

# Contents

All Rights Reserved ..... I
About This Manual ..... II
1 Safety ..... 1
1.1 PV Panels ..... 1
1.2 Utility Grid ..... 1
1.3 Inverter ..... 2
1.4 Skills of Qualified Personnel ..... 3
2 Product Introduction ..... 4
2.1 Intended Usage ..... 4
2.2 Product Introduction ..... 5
2.2.1 Model Description ..... 5
2.2.2 Appearance ..... 6
2.2.3 Dimensions ..... 6
2.2.4 LED Indicator Panel ..... 7
2.2.5 DC Switch ..... 7
2.3 Circuit Diagram ..... 8
2.4 Function Description ..... 8
3 Unpacking and Storage ..... 10
3.1 Unpacking and Inspection ..... 10
3.2 Identifying the Inverter ..... 10
3.3 Scope of Delivery ..... 12
3.4 Inverter Storage ..... 12
4 Mechanical Mounting ..... 14
4.1 Safety during Mounting ..... 14
4.2 Location Requirements ..... 14
4.2.1 Installation Environment Requirements ..... 14
4.2.2 Carrier Requirements ..... 15
4.2.3 Installation Angle Requirements ..... 15
4.2.4 Installation Clearance Requirements ..... 16
4.3 Installation Tools ..... 18
4.4 Moving the Inverter ..... 19

4.4.1 Manual Transport ..... 19
4.4.2 Hoisting Transport ..... 19
4.5 Dimensions of mounting-bracket ..... 20
4.6 PV Bracket-Mounted Installation ..... 21
4.6.1 Preparation before Mounting ..... 21
4.6.2 Mounting Steps ..... 21
4.7 Wall-Mounted Installation ..... 23
4.7.1 Preparation before Mounting ..... 23
4.7.2 Mounting Steps ..... 23
5 Electrical Connection ..... 26
5.1 Safety Instructions ..... 26
5.2 Terminal Description ..... 26
5.3 Electrical Connection Overview ..... 28
5.4 Additional Grounding Connection ..... 30
5.4.1 Additional Grounding Requirements ..... 30
5.4.2 Connection Procedure ..... 30
5.5 Opening the Wiring Compartment ..... 31
5.6 AC Cable Connection ..... 32
5.6.1 AC Side Requirements ..... 32
5.6.2 Requirements for OT/DT Terminal ..... 34
5.6.3 Aluminium Cable Requirements ..... 35
5.6.4 Connection Procedure ..... 35
5.7 DC Cable Connection ..... 38
5.7.1 PV Input Configuration ..... 39
5.7.2 Connection Procedure ..... 40
5.7.3 Installing the PV Connectors ..... 41
5.8 Wiring of Tracking System Power Cable (Optional) ..... 42
5.9 RS485 Communication ..... 45
5.9.1 Interface Description ..... 45
5.9.2 RS485 Communication System ..... 47
5.9.3 Connection Procedure(Terminal Block) ..... 48
5.10 PLC Communication Connection ..... 49
5.11 Dry Contact Connection ..... 50
5.11.1 Dry Contact Function ..... 50
5.11.2 Wiring Procedure ..... 52
5.12 Closing the Wiring Compartment ..... 52

6 Commissioning ..... 54
6.1 Inspection before Commissioning ..... 54
6.2 Commissioning Procedure ..... 54
7 iSolarCloud App ..... 55
7.1 Brief Introduction ..... 55
7.2 Download and Install ..... 55
7.3 Function Overview ..... 56
7.4 Login ..... 56
7.4.1 Requirements ..... 56
7.4.2 Login Steps ..... 56
7.5 Home page ..... 58
7.6 Running Information ..... 60
7.7 History Record ..... 62
7.7.1 Fault Alarm Records ..... 63
7.7.2 Power Yields Records ..... 64
7.7.3 Event Records ..... 65
7.8 More ..... 65
7.8.1 Parameter Setting ..... 66
7.8.2 Password Changing ..... 66
8 System Decommissioning ..... 68
8.1 Disconnecting the Inverter ..... 68
8.2 Dismantling the Inverter ..... 68
8.3 Disposal of the Inverter ..... 69
9 Troubleshooting and Maintenance ..... 70
9.1 Troubleshooting ..... 70
9.2 Maintenance ..... 80
9.2.1 Routine Maintenance ..... 81
9.2.2 Maintenance Instruction ..... 81
10 Appendix ..... 84
10.1 Technical Data ..... 84
10.2 Wring Distance of DI Dry Contact ..... 86
10.3 Quality Assurance ..... 87
10.4 Contact Information ..... 88

# 1 Safety

The inverter has been designed and tested strictly according to international safety regulations. Read all safety instructions carefully prior to any work and observe them at all times when working on or with the inverter.

Incorrect operation or work may cause:

- injury or death to the operator or a third party; or
- damage to the inverter and other property safety of the operator or a third party.

All detailed work-related safety warnings and notes will be specified at critical points in this manual.

> The safety instructions in this manual cannot cover all the precautions that should be followed. Perform operations considering actual onsite conditions.
> SUNGROW shall not be held liable for any damage caused by violation of the safety instructions in this manual.

## 1.1 PV Panels

**DANGER**

**PV strings will produce electrical power when exposed to sunlight and can cause a lethal voltage and an electric shock.**

- **Always keep in mind that the inverter is dual power supplied. Electrical operators must wear proper personal protective equipment: helmet, insulated footwear, glove, etc.**
- **Before touching the DC cables, operator must use a measuring device to ensure that the cable is voltage-free.**
- **Follow all warnings on the PV strings and in its manual.**

## 1.2 Utility Grid

Please follow the regulations related to the utility grid.

**NOTICE**

All electrical connections must be in accordance with local and national standards.
Only with the permission of the utility grid, the inverter can be connected to the utility grid.

## 1.3 Inverter

**DANGER**

Danger to life from electric shocks due to live voltage

- Do not open the enclosure at any time. Unauthorized opening will void guarantee and warranty claims and in most cases terminate the operating license.

**WARNING**

Risk of inverter damage or personal injury

- Do not pull out the PV connectors when the inverter is running.
- Wait at least 5 minutes for the internal capacitors to discharge. Ensure that there is no voltage or current before pulling any connector.

**WARNING**

All safety instructions, warning labels, and nameplate on the inverter:

- Must be clearly legible.
- Should not be removed or covered.

**CAUTION**

Risk of burns due to hot components!
Do not touch any hot parts (such as heat sink) during operation. Only the DC switch can safely be touched at any time.

**NOTICE**

**Only qualified personnel can perform the country setting.**

- **Unauthorized alteration of the country setting may cause a breach of the type-certificate marking.**

**By touching the electronic components, you may damage the inverter. For inverter handling, be sure to:**

- **avoid any unnecessary touching;and,**
- **wear a grounding wristband before touching any connectors.**

**Warning Label**

| Label | Description |
|---|---|
| | Danger to life due to high voltages!<br>Only qualified personnel can open and service the inverter. |
| | Disconnect the inverter from all the external power sources before service! |
| 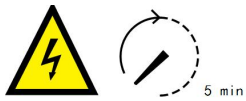  | Do not touch live parts until 5minutes after disconnection from the power sources. |
| | There is a danger from a hot surface that may exceed 60 ° C. |
| | Check the user manual before service! |

## 1.4 Skills of Qualified Personnel

All installations should be performed by qualified personnel. They should have:

- Training in the installation and commissioning of the electrical system, as well as the dealing with hazards
- Knowledge of the manual and other related documents
- Knowledge of the local regulations and directives

# 2 Product Introduction

## 2.1 Intended Usage

SG250HX, a transformerless three-phase PV grid-connected inverter, is an integral component in the PV power system.

The inverter is designed to convert the direct current power generated from the PV modules into grid-compatible AC current and feeds the AC current to the utility grid. The intended usage of the inverter is illustrated in "figure 2-1 Inverter application in PV power system".

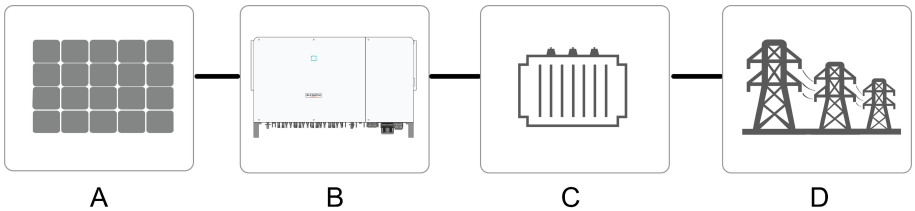


**figure 2-1** Inverter application in PV power system

**WARNING**

**Inverter cannot connect the PV strings whose positive and negative terminals need to be grounded.**

**Do not connect any local load between the inverter and the AC circuit breaker.**

| Item | Description | Note |
|---|---|---|
| A | PV strings | Monocrystalline silicon, polycrystalline silicon and thin-film without grounding. |
| B | Inverter | SG250HX |
| C | Transformer | Boost the low voltage from inverter to grid-compatible medium voltage. |
| D | Utility grid | TN-C, TN-S, TN-C-S, TT, IT. |

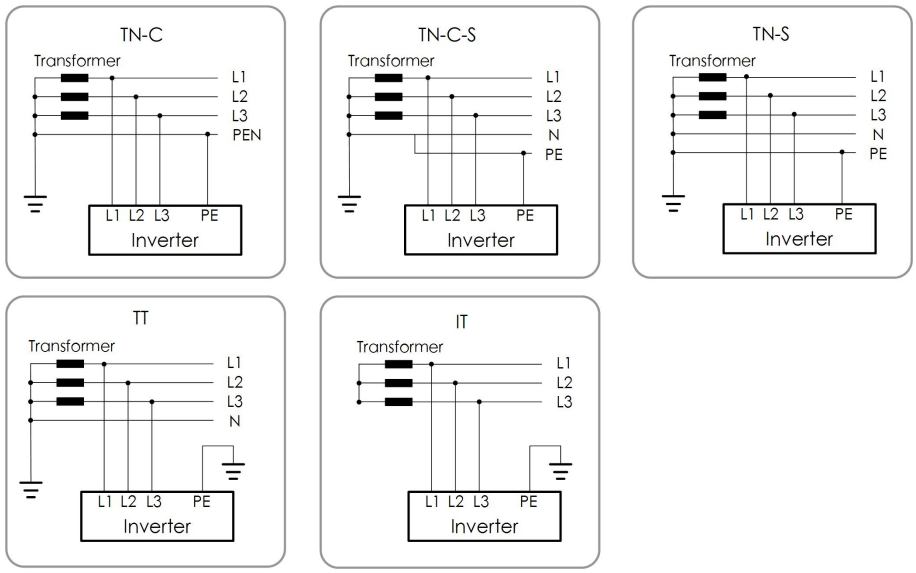


Make sure the inverter is applied to an IT system before enabling the Anti-PID function.

## 2.2 Product Introduction

### 2.2.1 Model Description

The device model description is as follows:

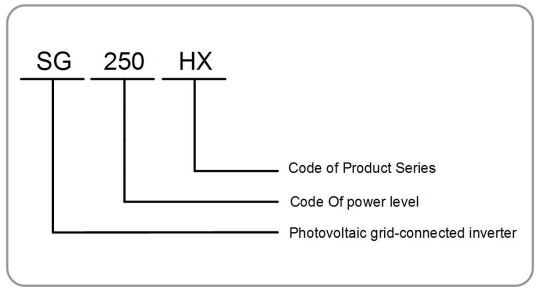


| Model | Nominal Output Power | Nominal Grid Voltage |
|---|---|---|
| SG250HX | 250 kVA @ 30 ℃ / 225 kVA @ 40 ℃ / 200 KVA @ 50 ℃ | 3 / PE, 800 V |

The device model can be found on the nameplate attached to the side of the inverter. For details, refer to "3.2 Identifying the Inverter".

### 2.2.2 Appearance

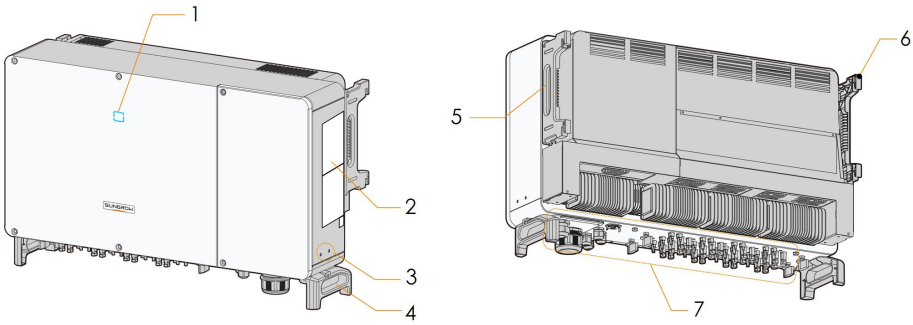


*The image shown here is for reference only. The actual product you receive may differ.

| No. | Name | Description |
|---|---|---|
| 1 | LED indicator panel | HMI interface to indicate the present working state of the inverter. |
| 2 | Labels | Warning symbols, nameplate, and QR code. |
| 3 | Additional grounding terminals | 2, use at least one of them to ground the inverter. |
| 4 | Bottom handles | 2, used to move the inverter. |
| 5 | Side handles | 2, used to move the inverter. |
| 6 | Mounting ears | 4, used to hang the inverter onto the mounting-bracket. |
| 7 | Wiring area | DC switches, AC terminals, DC terminals, and communication terminals.<br>For details, refer to "5.2 Terminal Description". |

### 2.2.3 Dimensions

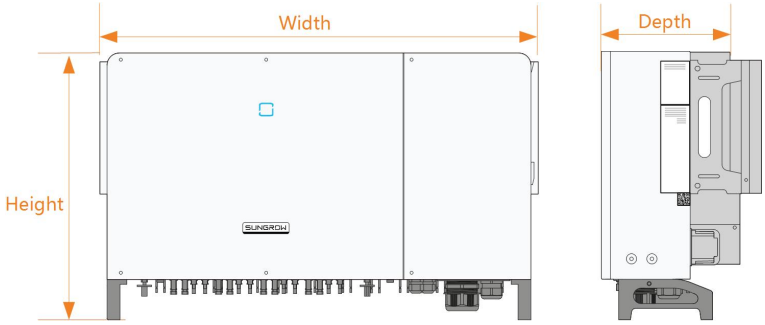


**figure 2-2** Dimensions of the Inverter

*The image shown here is for reference only. The actual product you receive may differ.

| Dimensions (W*H*D) | Weight |
|---|---|
| 1051*660*363mm<br>( 41.4''*26''*14.3'') | 99kg (218.3 lb) |

### 2.2.4 LED Indicator Panel

As an HMI, the LED indicator panel on the front of the inverter can indicate the present working state of the inverter.

**table 2-1** LED indicator description

| LED indicator | LED state | Definition |
|---|---|---|
| Blue | ON | The device is connected to the grid and operating normally. |
| | Fast blink (Period: 0.2s) | The Bluetooth communication is connected and there is data communication.<br>No system fault occurs. |
| | Slow flash (Period: 2s) | The device is in standby or startup state (not feeding power into the grid). |
| Red | ON | A fault occurs and the device cannot connect to the grid |
| | Twinkling | The Bluetooth communication is connected and there is data communication.<br>System fault occurs. |
| OFF | OFF | Both the AC and DC sides are powered down. |

### 2.2.5 DC Switch

The DC switch is used to disconnect the DC current safely whenever necessary.

The inverter is equipped with four DC switches, each DC switch controls its corresponding DC terminals.

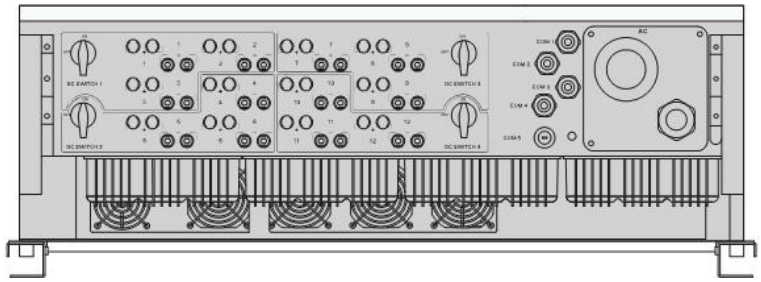

Turn the DC switches to the ON position before restarting the inverter.

## 2.3 Circuit Diagram

The MPPT is utilized for DC input to ensure the maximum power from the PV array at different PV input conditions. The inversion circuit converts the DC power into AC power and feeds the AC power into the utility grid through the AC terminal. The protection circuit is equipped to ensure the safe operation of the device and personal safety.

The following figure shows the main circuit of the inverter.

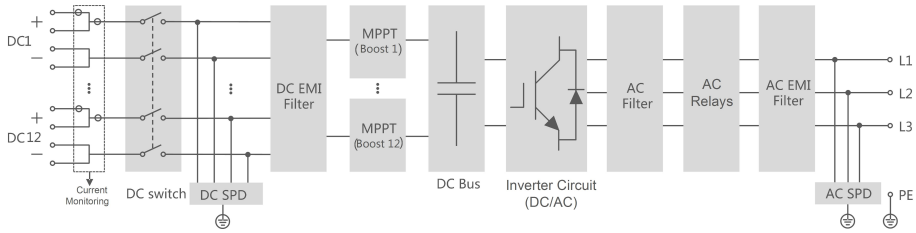


**figure 2-3** Circuit diagram

## 2.4 Function Description

The inverter is equipped with the following functions:

### Conversion function

The inverter converts the DC current into grid-compatible AC current and feeds the AC current into the grid.

### Data storage

The inverter logs running information, error records, etc.

### Parameter configuration

The inverter provides various settable parameters. Users can set parameters via the App to meet the requirements and optimize the performance.

### Communication interface

The inverter is designed with standard RS485 communication interfaces.

The standard RS485 communication interfaces are used to establish communication connection with monitoring devices and upload monitoring data by using communication cables.

After communication connection is established, users can view inverter information or set inverter parameters through the iSolarCloud.

### Protection Function

The protective functions are integrated in the inverter, including anti-island protection, LVRT/ZVRT, DC reversed polarity protection, AC short circuit protection, leakage current protection, DC overvoltage/overcurrent protection, etc.

### PID function

After the PID function is enabled, the voltage to ground of all PV modules is greater than 0, that is, the PV module-to-ground voltage is a positive value.

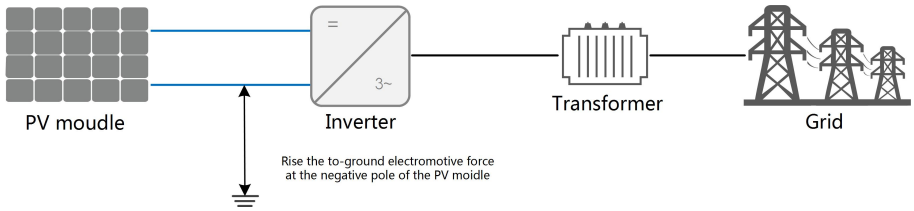


**NOTICE**

- **Before enabling the PID recovery function, make sure the voltage polarity of the PV modules to ground meets requirement. If there are any questions, contact the PV module manufacturer or read its corresponding user manual.**
- **If the voltage scheme for the PID protection/recovery function does not meet the requirement of corresponding PV modules, the PID function will not work as expected or even damage the PV modules.**

- Anti-PID function

When the inverter is running, the PID function module rises the potential between the negative pole of the PV array and the ground to a positive value, to suppress the PID effect.

Make sure the inverter is applied to an IT system before enabling the anti-PID function.

- PID recovery function

When the inverter is not running, the PID module will apply inverse voltage to PV modules, to restore the degraded modules.

- If the PID recovery function is enabled, it only works at night.
- After the PID recovery function is enabled, the voltage of the PV string to ground is 500Vdc by default, and the default value can be modified through the App.

# 3 Unpacking and Storage

## 3.1 Unpacking and Inspection

The inverter is thoroughly tested and strictly inspected before delivery. Damage may still occur during shipping. Conduct a thorough inspection after receiving the device.

- Check the packing for any visible damage.
- Check the inner contents for damage after unpacking.
- Check the delivery scope for completeness according to the packing list.

Contact SUNGROW or the supplier in case there is any damage or incompleteness.
Do not dispose of the original packing case. It is recommended to store the inverter in it.

## 3.2 Identifying the Inverter

The nameplate can be found on both the inverter and the packing case. It provides information on type of inverter, important specifications, marks of certification institutions, and serial number which are available and identified by SUNGROW.

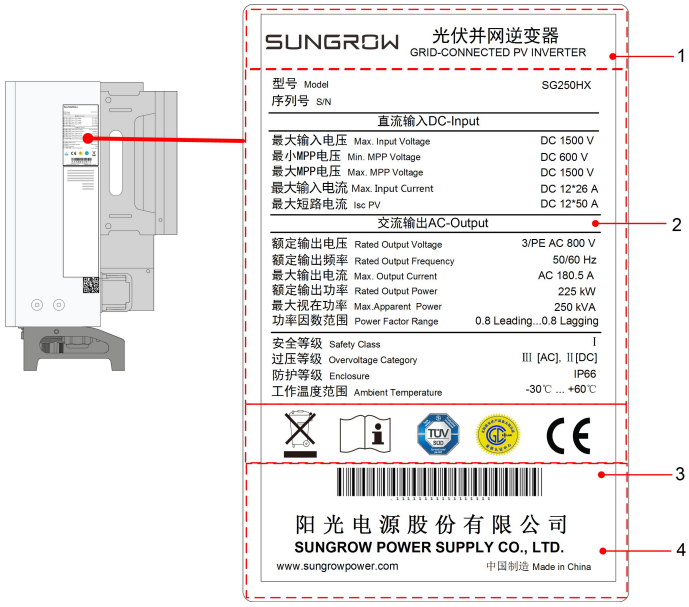


**figure 3-1** Nameplate of Inverters

* The image shown here is for reference only. The actual product you receive may differ.

| Item | Description |
|---|---|
| 1 | SUNGROW logo and product type |
| 2 | Technical data of inverter |
| 3 | Instructions and marks of conformity |
| 4 | Company name, website and country of manufacture |

**table 3-1** Description of Icons on the Nameplate

| Icon | Description |
|---|---|
| | Do not dispose of the inverter together with household waste. |
| | Refer to the corresponding instructions. |
| | TÜV mark of conformity. |
| | CGC-SOLAR mark of conformity. |
| | CE mark of conformity. |

## 3.3 Scope of Delivery

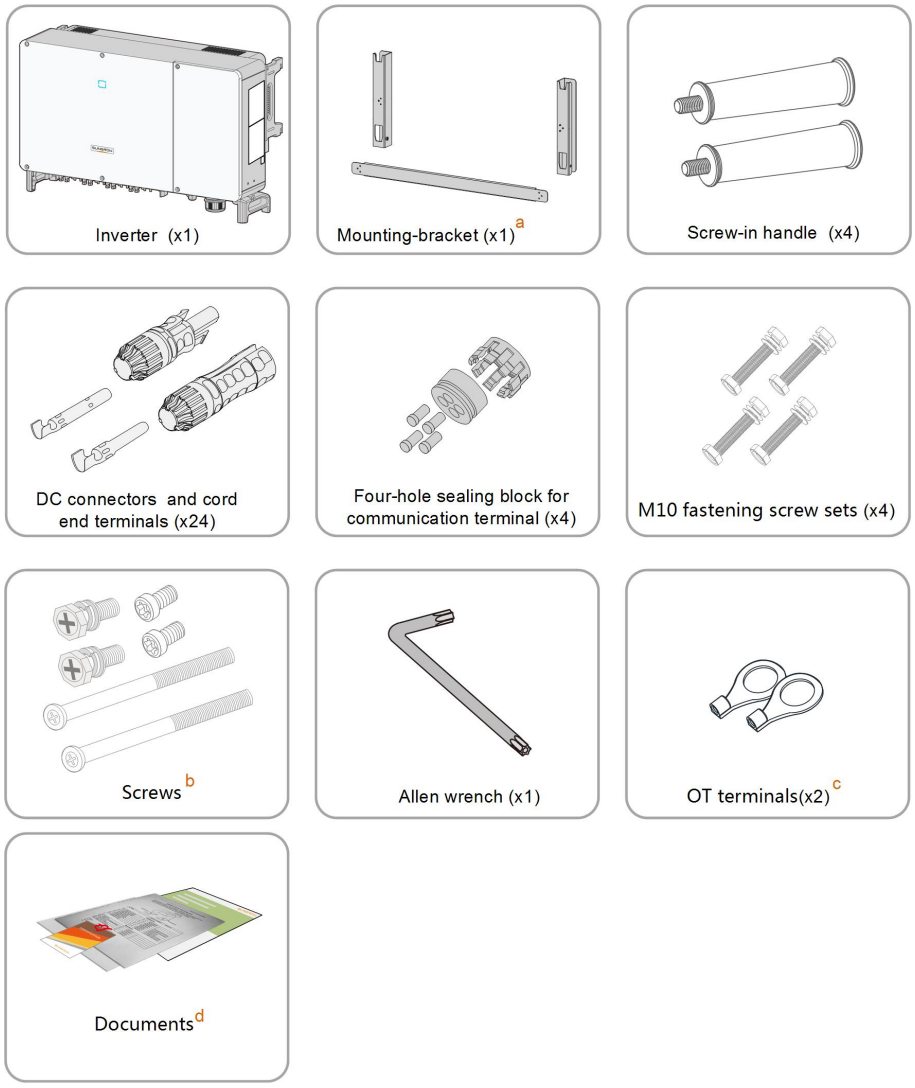


**figure 3-2** Scope of Delivery

a. The mounting-bracket includes 2 mounting-bracket components and 1 connecting bar.

b. The screws include two M4 × 10, two M6 × 65, and two M6 × 12 hex socket screws.

c. The two OT terminals are used for wiring power cable of the tracking system, where the wiring range is 4 – 6mm$^2$.

d. The documents include the quick installation guide, packing list, warranty card, etc.

## 3.4 Inverter Storage

Proper storage is required if the inverter is not installed immediately.

- Store the inverter in the original packing case with the desiccant inside.
- The storage temperature must be always between -40 ° C and +70 ° C, and the storage relative humidity must be always between 0 and 95 %, non-condensing.
- In case of stacking storage, the number of stacking layers should never exceed the limit marked on the outer side of the packing case.

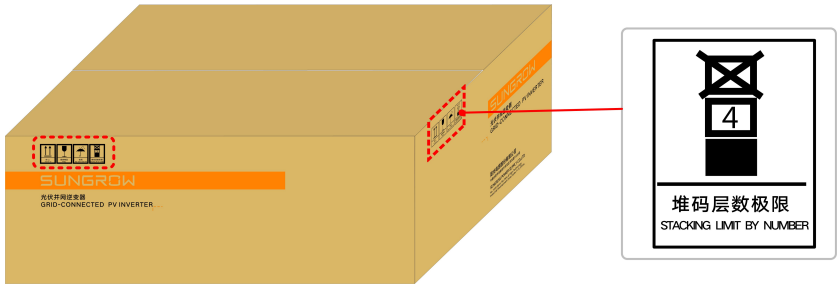


- The packing case should be upright.
- If the inverter has been stored more than half a year, the qualified personnel should thoroughly check and test it before using.

# 4 Mechanical Mounting

## 4.1 Safety during Mounting

**⚠ DANGER**

**Make sure there is no electrical connection before installation.**
**In order to avoid electric shock or other injury, be sure there is no electricity or plumbing installations before drilling holes.**

**⚠ CAUTION**

**Risk of injury due to improper handling**

- **Always follow the instructions when moving and positioning the inverter.**
- **Improper operation may cause injuries, serious wounds, or bruise.**

**System performance loss due to poor ventilation!**

- **Keep the heat sinks uncovered to ensure heat dissipation performance.**

## 4.2 Location Requirements

Select an optimal mounting location for safe operation, long service life, and outstanding performance.

- The inverter with IP 66 can be installed both indoors andoutdoors.
- Install the inverter in a place convenient for electrical connection, operation, and maintenance.

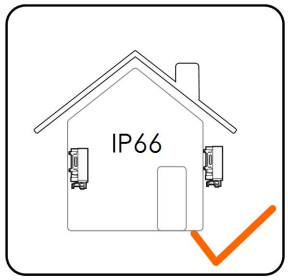


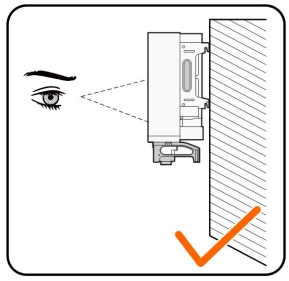

### 4.2.1 Installation Environment Requirements

- The installation environment is free of inflammable or explosive materials.
- The location should be not accessible to children.

- The ambient temperature and relative humidity must meet the following requirements.

- Do not install the inverter outdoors in areas with salt damage, which mainly refer to the areas within 500 m away from the coast. The deposition of salt fog varies largely with nearby seawater characteristics, sea wind, precipitation, relative humidity, terrain, and forest coverage.
- Prevent the inverter from direct exposure to sun, rain and snow.
- The inverter should be well ventilated. Ensure air circulation.
- Never install the inverter in living areas. The inverter will generate noise during operation, affecting daily life.

### 4.2.2 Carrier Requirements

The installation carrier should meet the following requirements:

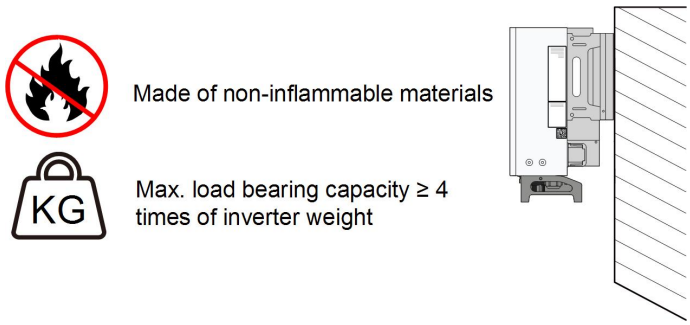


### 4.2.3 Installation Angle Requirements

Inverter vertically or at a minimum back tilt of 10 ° . Forward installation or upside down installation is prohibited.

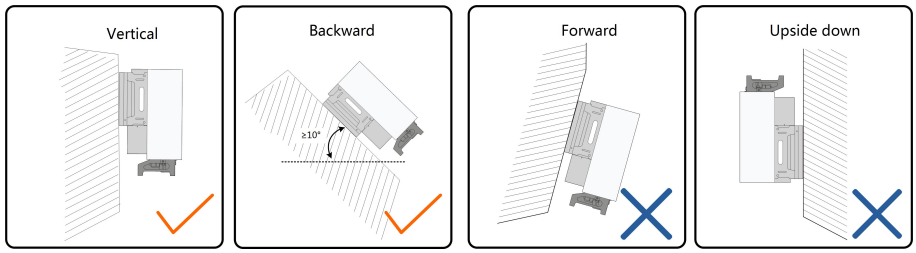

In case the installation site is a level surface, mount the inverter to the horizontal-mounting bracket to meet the mounting angle requirements, as shown in the figure below.

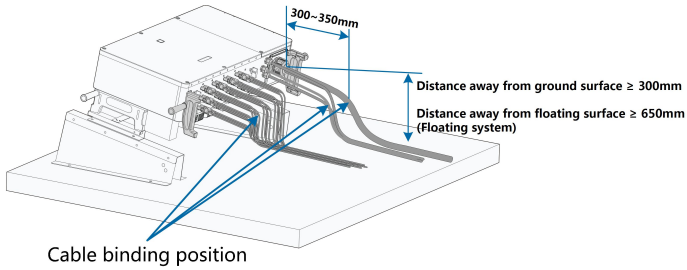


Take the following items into account when designing the bracket scheme:

- Consider onsite climate conditions and take anti-snow and anti-rain measures if necessary.
- Ensure that the waterproof connectors are at least 300mm higher than the ground surface. In case the inverter is applied in a floating power plant, ensure that the waterproof connectors are at least 650mm higher than the floating body surface.
- Bind the cables at the positions 300~350mm away from the DC connector, AC waterproof terminal, and communication waterproof terminal.
- The various waterproof terminals should be tightened in accordance with the torque requirements in this manual to ensure that they are tight and sealed.

Contact SUNGORW if you have any question.

### 4.2.4 Installation Clearance Requirements

- Reserve enough clearance around the inverter to ensure sufficient space for heat dissipation. (The fans are maintained on the left side of the inverter, and a larger clearance is required.)

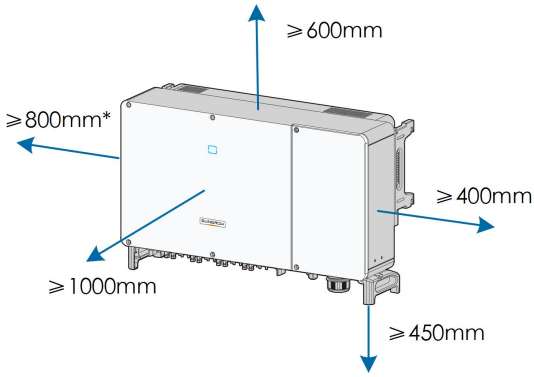

* The distance can be shortened to 200mm according to onsite conditions. In case the distance is less than 800mm, move the inverter from the mounting-bracket or wall before maintaining fans.

- In case of multiple inverters, reserve specific clearance between the inverters.

- In case of back-to-back installation, reserve specific clearance between the two inverters.

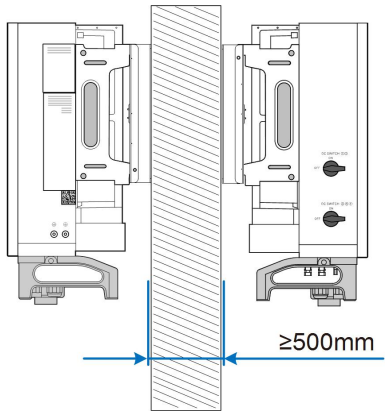


- Install the inverter at an appropriate height for ease of viewing LED indicators and operating switches.

## 4.3 Installation Tools

Installation tools include but are not limited to the following recommended ones. If necessary, use other auxiliary tools on site.

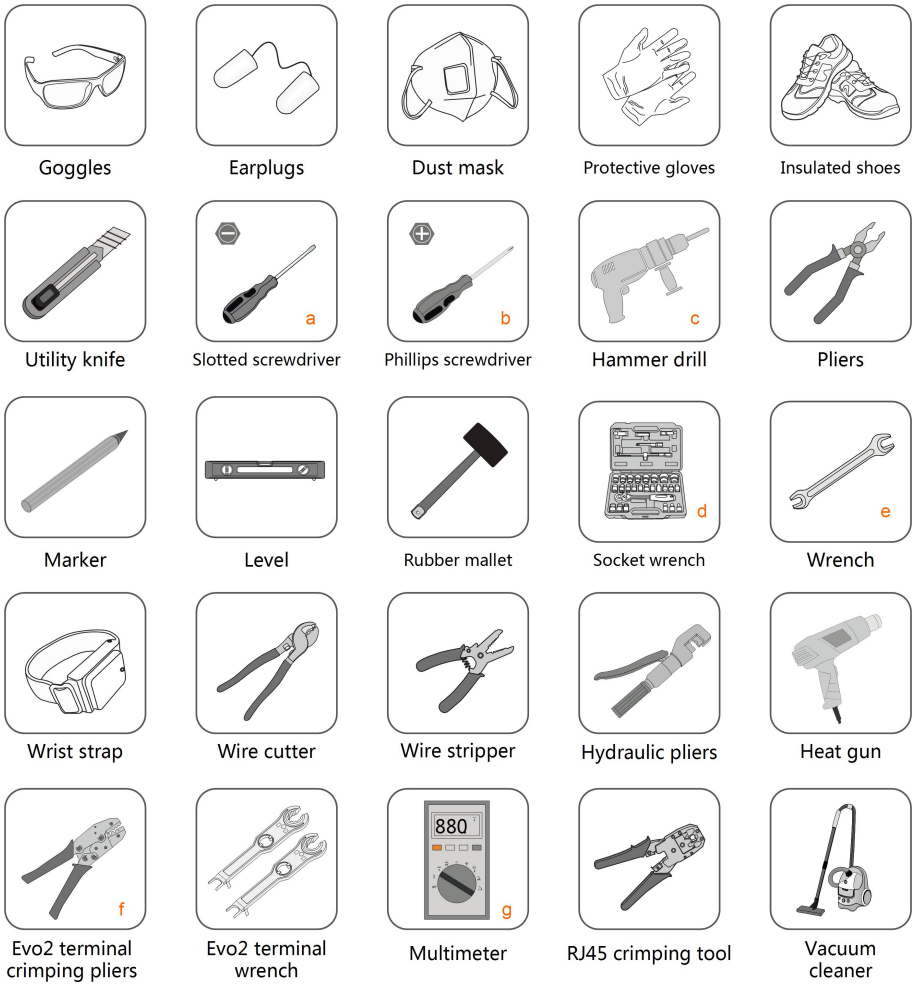


**table 4-1** Tool specification

| No. | Specification |
|---|---|
| a | M2/M6 |
| b | M4/M6/M8 |
| c | Drill bit: φ12, φ14 |
| d | Includes sleeve with opening size 16mm |
| e | Opening:13, 16mm |
| f | Crimp range 4~6mm² |
| g | Range≥1500Vdc |

## 4.4 Moving the Inverter

Move the inverter to the specified position before installation. The inverter can be moved manually or via a hoist.

### 4.4.1 Manual Transport

**step 1** Release the sealing screws on the mounting ears with a flat-head screwdriver and store them properly. Anchor the four supplied screw-in handles to the mounting ears and base of the inverter.

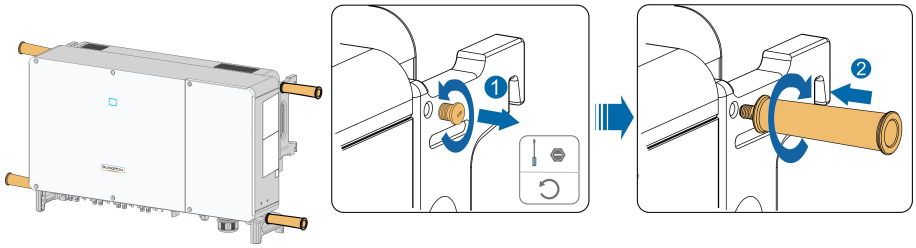


**step 2** Lift and move the inverter to the destination by using the side and bottom handles as well as the four installed handles.

**step 3** Remove the screw-in handles and reassemble the sealing screws released in Step 1.

**⚠ CAUTION**

**Inappropriate moving operation may cause personal injury!**
**It is recommended that at least four installers carry the inverter together and wear protective equipment such as smash-proof shoes and gloves.**
**Always beware of the gravity center of the inverter and avoid tipping.**

**NOTICE**

**The ground surface on which the inverter is to be placed should be covered with a sponge pad, foam cushion or the like to prevent the inverter bottom from scratches.**

- - End

### 4.4.2 Hoisting Transport

**step 1** Release the sealing screws on the mounting ears and store them properly. Anchor two M12 thread lifting rings to the hangers of the inverter.

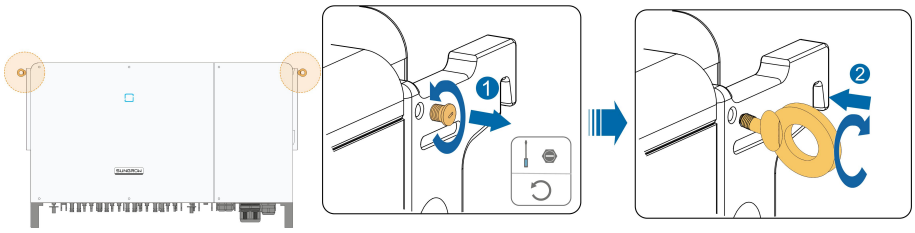

**step 2** Lead the sling through the two lifting rings and fasten the tie-down strap.

**step 3** Hoist the inverter, and stop to check for safety when the inverter is 100mm above the ground. Continue hoisting the device to the destination after ensuring the safety.

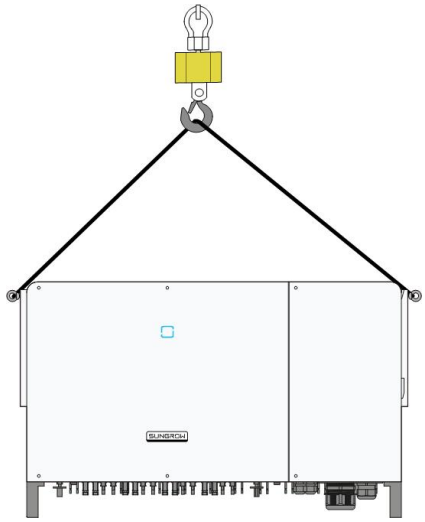

**step 4** Remove the lifting rings and reassemble the sealing screws released in Step 1.

**CAUTION**

**Keep the inverter balanced throughout the hoisting process and avoid collisions with walls or other objects.**

**Stop hoisting in the event of severe weather, such as heavy rain, thick fog, or strong wind.**

The lifting rings and the sling are not within the delivery scope.

- - End

## 4.5 Dimensions of mounting-bracket

Dimensions of the assembled mounting-bracket are as follows:

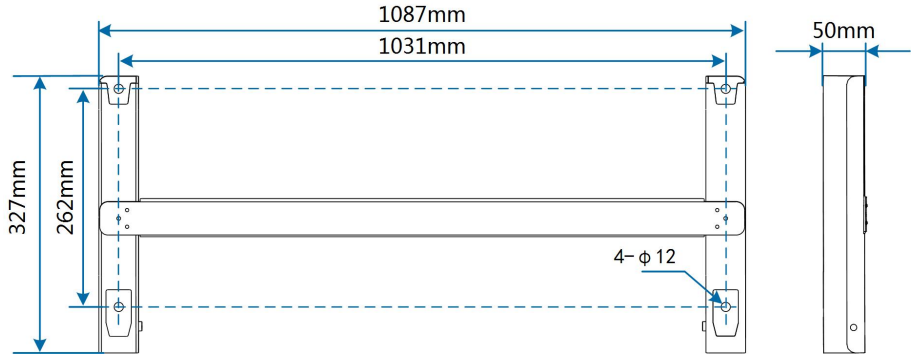


**figure 4-1** Dimensions of mounting-bracket

## 4.6 PV Bracket-Mounted Installation

### 4.6.1 Preparation before Mounting

**Tools**

| Item | Specification |
|---|---|
| Phillips screwdriver/ electric screw driver | M4, M6 |
| Marker | - |
| Level | - |
| Hammer drill | Drill bit: φ12 |
| Socket wrench | Including 16mm socket |
| wrench | Opening: 16mm |

**Spare parts**

| Item | Quantity | Specification | Source |
|---|---|---|---|
| Grub screw | 2 | M4 × 10 | Delivery scope |
| | 2 | M6 × 65 | Delivery scope |
| Bolt assembly | 4 | M10 | Delivery scope |

### 4.6.2 Mounting Steps

**step 1** Assemble the mounting-bracket by using the connecting bar.

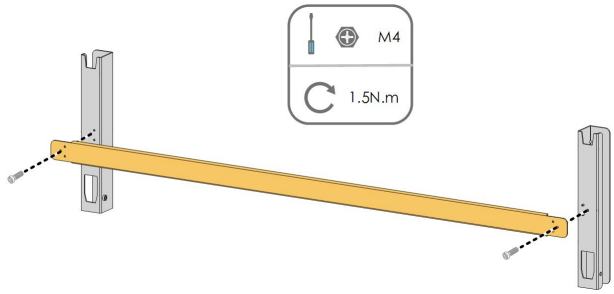

**step 2** Level the assembled mounting-bracket by using the level, and mark the positions for drilling holes on the PV bracket. Drill the holes by using a hammer drill.

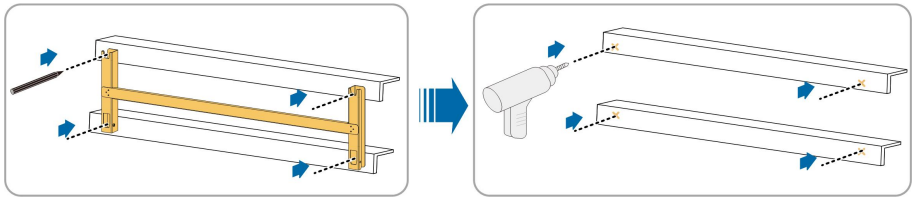

**step 3** Secure the mounting-bracket with bolts.

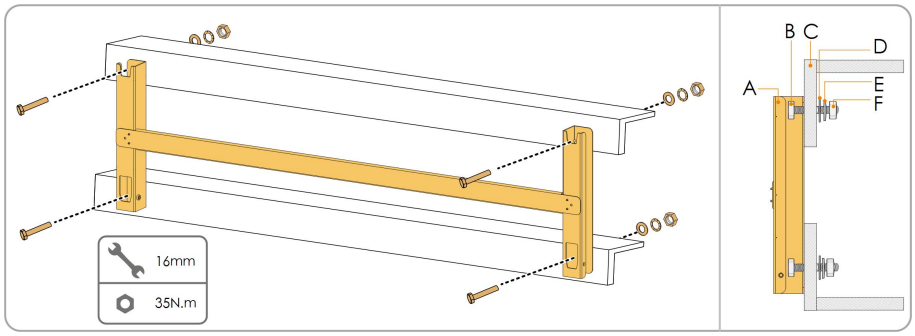


**table 4-2** Fastening sequence

| No. | Components | Description |
|---|---|---|
| A | Mounting-bracket | - |
| B | Full threaded bolt | M10*45 |
| C | Metal bracket | - |
| D | Flat washer | - |
| E | Spring washer | - |
| F | Hex nuts | M10 |

**step 4** Take out the inverter from the packing case.

**step 5** Hoist the inverter to the installation position when necessary (refer to "4.4.2 Hoisting Transport"). If the installation position is not high enough, skip performing this step.

**step 6** Hang the inverter to the mounting-bracket and ensure that the mounting ears perfectly engage with the mounting-bracket.

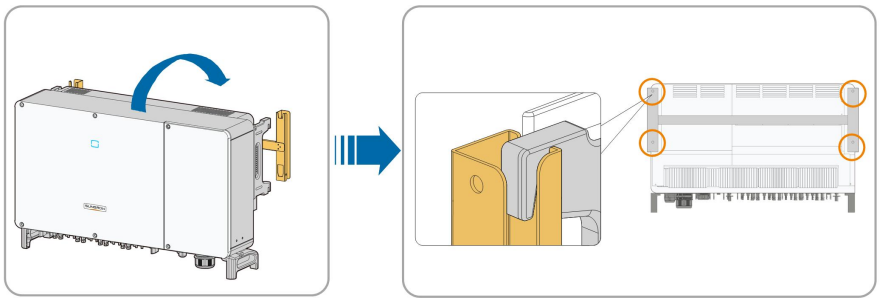

**step 7** Fix the inverter with two M6 × 65 screws.

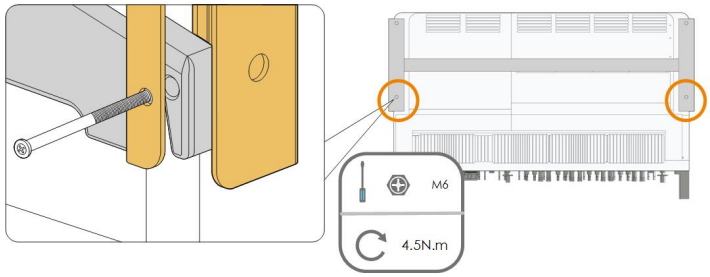


- - End

## 4.7 Wall-Mounted Installation

### 4.7.1 Preparation before Mounting

**Tools**

| Item | Specification |
|---|---|
| Phillips screwdriver/ electric screw driver | M4, M6 |
| Marker | - |
| Level | - |
| Hammer drill | Drill bit(Select according to expansion bolt specifications) |
| Socket wrench | Including 16mm socket |
| Wrench | Opening: 16mm |

**Spare parts**

| Item | Quantity | Specification | Source |
|---|---|---|---|
| Grub screw | 2 | M4 × 10 | Delivery scope |
| | 2 | M6 × 65 | Delivery scope |
| Expansion bolts | 4 | M10 × 95 (Recommended) | Self-prepared |

### 4.7.2 Mounting Steps

**step 1** Assemble the mounting-bracket by using the connecting bar.

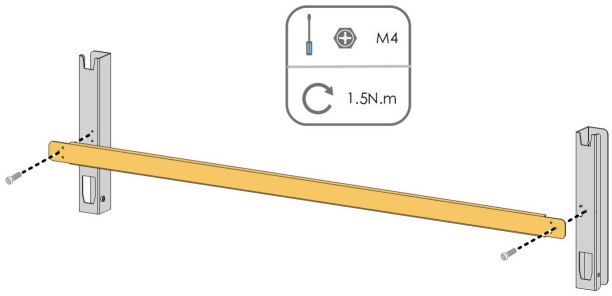


**step 2** Level the assembled mounting-bracket by using the level, and mark the positions for drilling holes on the installation site.

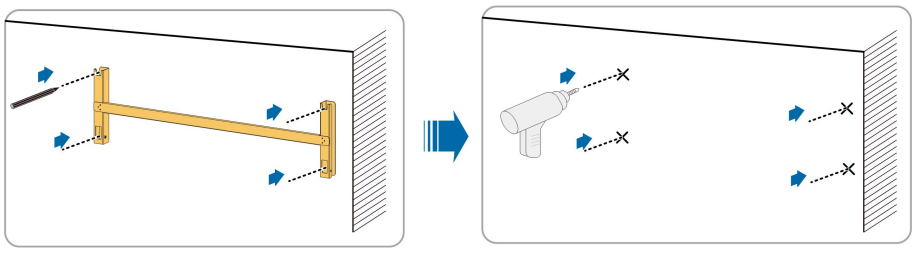

**step 3** Insert the expansion bolts into the holes and secure them with a rubber hammer. Fasten the nut with a wrench to expand the bolt. Remove the nut, spring washer, and flat washer, and store them properly.

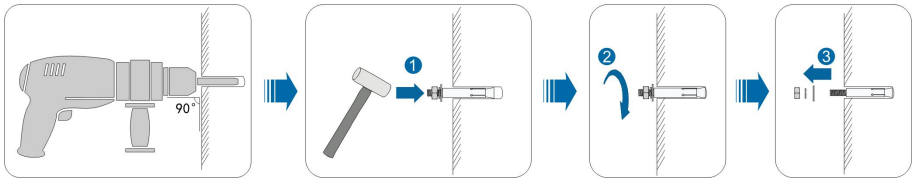


**step 4** Fix the mounting-bracket with the expansion bolts.

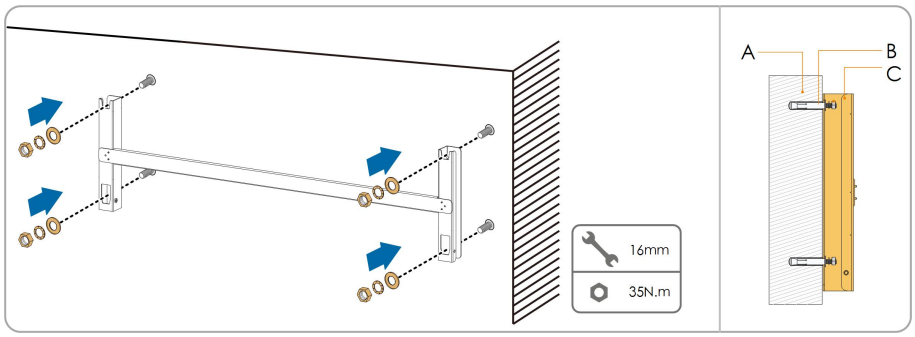

**table 4-3** Fastening sequence

| Item | Designation | Description |
|---|---|---|
| A | Wall | - |
| B | Expansion bolt | Fastening the bolt in the sequence of nut, spring washer, slat washer |
| C | Mounting-bracket | - |

**step 5** Take out the inverter from the packing case.

**step 6** Hoist the inverter to the installation position when necessary (refer to "4.4.2 Hoisting Transport"). If the installation position is not high enough, skip performing this step.

**step 7** Hang the inverter to the mounting-bracket and ensure that the mounting ears perfectly engage with the mounting-bracket.

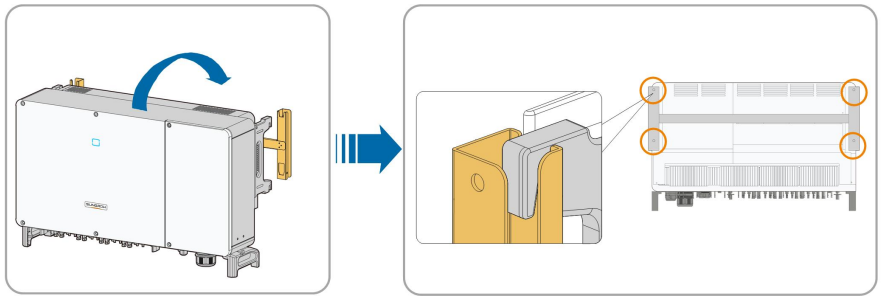

**step 8** Fix the inverter with screws.

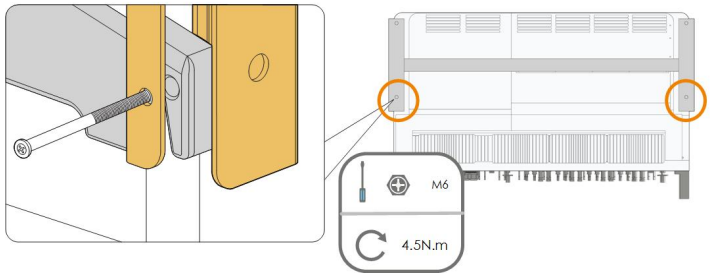


**- - End**

# 5 Electrical Connection

## 5.1 Safety Instructions

Prior to any electrical connections, keep in mind that the inverter has dual power supplies. It is mandatory for the qualified personnel to wear personal protective equipments (PPE) during the electrical work.

**⚠ DANGER**

**Danger to life due to a high voltage inside the inverter!**

- **The PV string will generate lethal high voltage when exposed to sunlight.**
- **Before starting electrical connections, disconnect the DC and AC circuit breakers and prevent them from inadvertent reconnection.**
- **Ensure that all cables are voltage free before performing cable connection.**

**⚠ WARNING**

- **Any improper operations during cable connection can cause device damage or personal injury.**
- **Only qualified personnel can perform cable connection.**
- **All cables must be undamaged, firmly attached, properly insulated and adequately dimensioned.**

**NOTICE**

**Comply with the safety instructions related to the PV strings and the regulations related to the utility grid.**

- **All electrical connections must be in accordance with local and national standards.**
- **Only with the permission of the utility grid, the inverter can be connected to the utility grid.**

## 5.2 Terminal Description

Wiring terminals are at the bottom of the inverter, as shown in the figure below.

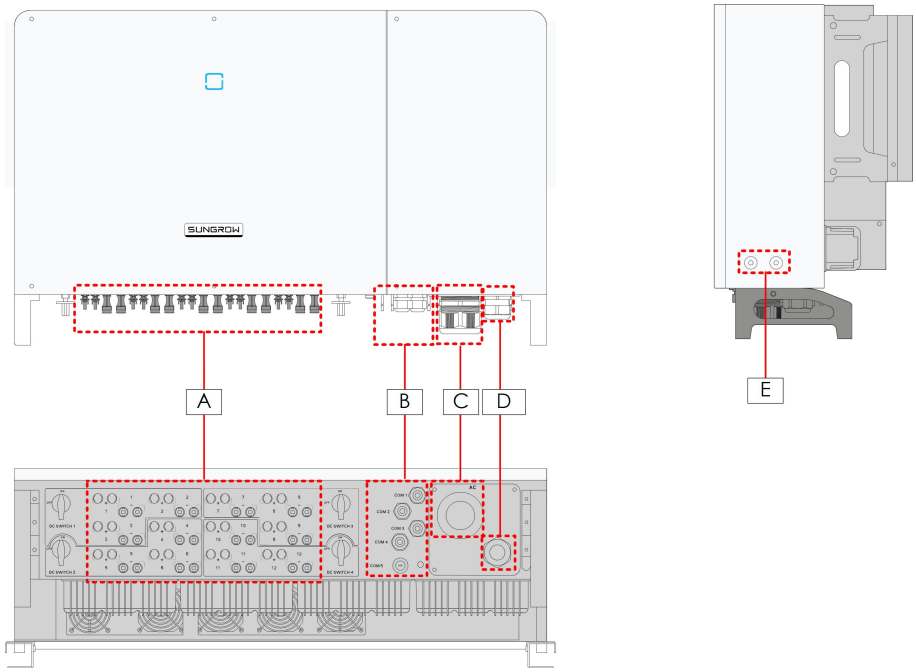


**figure 5-1** Wiring terminals

* Figure shown here is for reference only. The actual product you receive may differ !

| Item | Terminal | Mark | Note |
|---|---|---|---|
| A | PV terminals | + / - | 24, PV connector |
| B | Communication terminal | COM1 | RS485 communication, digital input/output DI/DO, and power supply of tracking system. |
| | | COM2 | |
| | | COM3 | |
| | | COM4 | |
| | | COM5 | Reserved |
| C | AC wiring terminal | AC | Used for AC output cable connection. |
| D | Standby grounding terminal* | | Used for internal grounding. |
| E | Additional grounding terminal | ⏚ | 2, use at least one of them to ground the inverter. |

*If the PE cable is an independent single-core cable, it is inserted into the cabinet through the standby grounding terminal.

## 5.3 Electrical Connection Overview

Electrical connection in the PV system includes additional grounding connection, AC connection, and PV string connection.

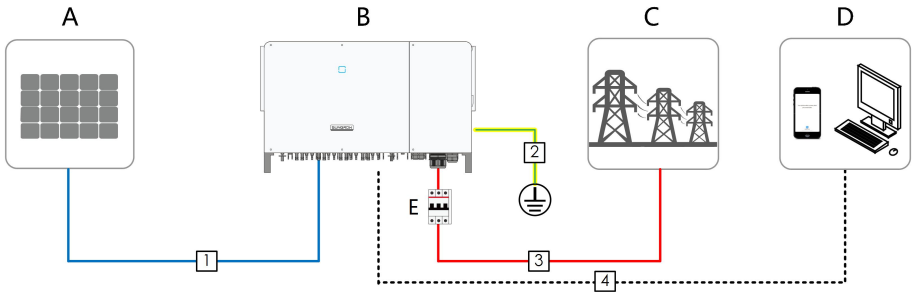


| Item | Designation |
|---|---|
| A | PV string |
| B | Inverter |
| C | Grid |
| D | Monitoring device |
| E | ACcircuit breaker |

**table 5-1** Cable requirements

| No. | Cable | Type | Specification | |
|---|---|---|---|---|
| | | | Cable Diameter (mm) | Cross-sectional area (mm²) |
| 1 | DC cable | PV cable complying with 1,500V standard | 4.7~6.4 | 4~6 |
| 2 | Additional Groundin-g cable | Outdoor single-core copper wire cable | / | The same as that of the PE wire in the AC cable |
| 3 | AC cable | Four-core copper or aluminum cable * | 38~56 | L1,L2,L3,(N) wire: 70~240<br>PE wire: refer to "table 5-2 PE wire requirements" |

| No. | Cable | Type | Specification | |
|---|---|---|---|---|
| | | | Cable Diameter (mm) | Cross-sectional area (mm²) |
| | | Three-core copper or aluminum cable and one independent single-core PE cable | Phase cable: 38~56 | L1,L2,L3 wire: 70~240 |
| | | | PE cable: 14~32 | PE wire: refer to "table 5-2 PE wire requirements" |
| | | Four single-core outdoor copper or aluminum cables** | 14~32 | L1,L2,L3 wire: 70~300 |
| | | | | PE wire: refer to "table 5-2 PE wire requirements" |
| 4 | Commun-ication cable | Shielded twisted pair | 4.5~18 | 1~1.5 |

* A copper to aluminum adapter terminal is required when an aluminum cable is used. For details, refer to "5.6.3 Aluminium Cable Requirements".

**If case of four single-core cables, an spare AC sealing plate accessory is required. To purchase the AC sealing plate accessory, contact SUNGROW.

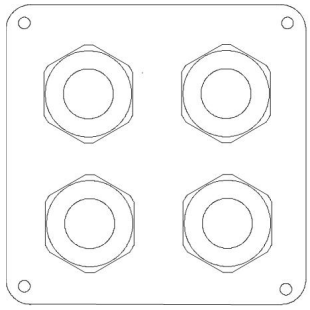

Spare AC sealing plate

**table 5-2** PE wire requirements

| PE wire cross section | Note |
|---|---|
| S/2<br>(S: Phase wire cross-section S) | The specifications are valid only when the phase wire and PE wire use the same material. If otherwise, ensure that the cross section of the PE wire produces a conductance equivalent to that of the wire specified in the table. |

**table 5-3** Power cable for tracking system

| Cable | Type | Specification | | |
|---|---|---|---|---|
| | | Cable Diameter(mm) | Recommended Cross-sectional area(mm²) | Voltage level |
| Power cable for tracking system | Double-core outdoor copper cable | 4.5~18 | 4~6* | Consistent with selected AC cable |

*Only when the cable cross-sectional area ranges between 4mm² and 6mm², the supplied OT terminals can be used. If otherwise, users should prepare M12 OT terminals by themselves, and ensure that the cable cross-sectional area is within the range of 0.5 – 10mm².

## 5.4 Additional Grounding Connection

**⚠ WARNING**

**Since the inverter is a transformerless inverter, neither the negative pole nor the positive pole of the PV string can be grounded. Otherwise, the inverter will not operate normally.**
**Connect the additional grounding terminal to the protective grounding point before AC cable connection, PV cable connection, and communication cable connection.**
**The ground connection of this additional grounding terminal cannot replace the connection of the PE terminal of the AC cable. Make sure thoes terminals are both grounded reliably.**

### 5.4.1 Additional Grounding Requirements

All non-current carrying metal parts and device enclosures in the PV power system should be grounded, for example, brackets of PV modules and inverter enclosure.
When there is only one inverter in the PV system, connect the additional grounding cable to a nearby grounding point.
When there are multiple inverters in the PV system, connect grounding points of all inverters and the PV array frames to the equipotential cable (according to the onsite conditions) to implement an equipotential connection.

### 5.4.2 Connection Procedure

**step 1** Prepare the cable and OT/DT terminal.

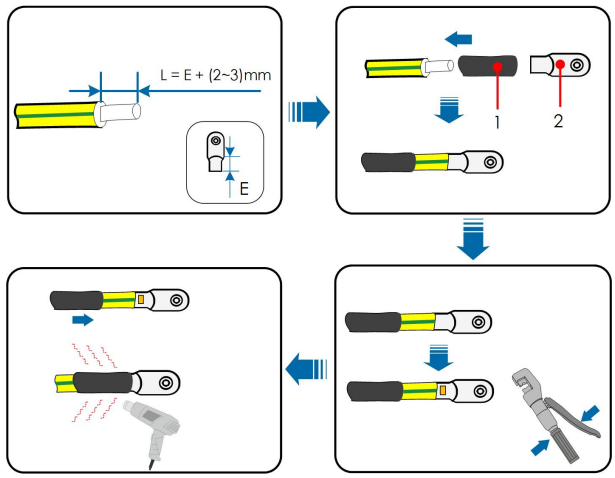


1:Heat shrink tubing 2： OT/DT terminal

**step 2** Remove the screw on the grounding terminal and fasten the cable with a screwdriver.

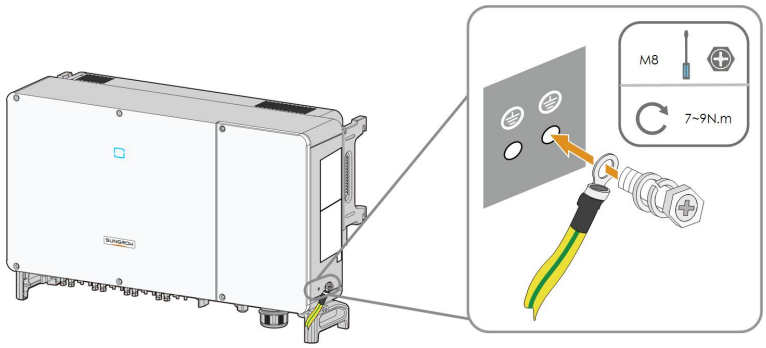


**step 3** Apply paint to the grounding terminal to ensure corrosion resistance.

**- - End**

> The grounding screws have been anchored to the side of the inverter before delivery, and do not need to be prepared.
>
> There are two grounding terminals. Use at least one of them to ground the inverter.

## 5.5 Opening the Wiring Compartment

**step 1** Release two screws on the front cover of the wiring compartment with supplied Allen wrench.

**step 2** Open the wiring compartment.

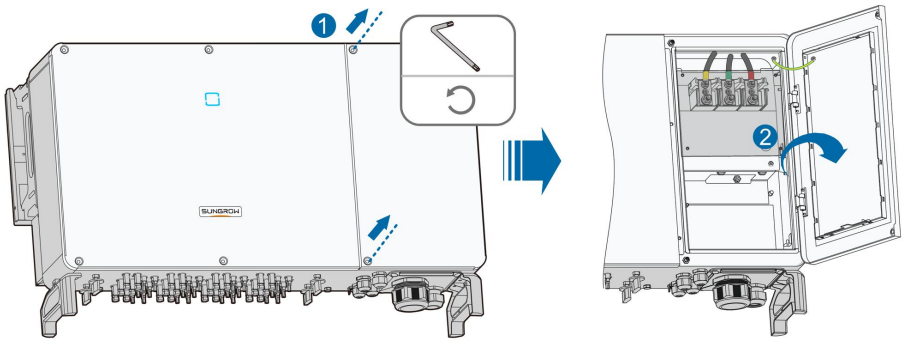

**step 3** Keep the wiring compartment opened during wiring through the limit lever attached to the cover.

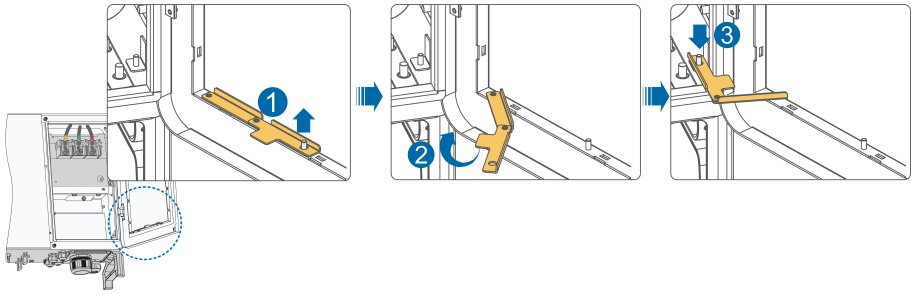

- - End

> Close the wiring compartment in reverse order after completing wiring operations.

## 5.6 AC Cable Connection

### 5.6.1 AC Side Requirements

Before connecting the inverter to the grid, ensure the grid voltage and frequency comply with requirements, for which, refer to "10.1 Technical Data". Otherwise, contact the electric power company for help.

> Connect the inverter to the grid only after getting an approval from the local electric power company.

**AC Circuit Breaker**

An independent three-pole circuit breaker is installed on the output side of the inverter to ensure safe disconnection from the grid.

| Recommended rated voltage | Recommended rated current |
|---|---|
| 800V | 250A |

If multiple inverters need to share a circuit breaker, the circuit breaker should be selected according to the capacity.

**NOTICE**

**Never connect a load between the inverter and the circuit breaker.**

**Multiple Inverters in parallel Connection**

If multiple inverters are connected in parallel to the grid, ensure that the total number of parallel inverters does not exceed 28. Otherwise, please contact SUNGROW for technical scheme.

**MV transformer**

The MV transformer used together with the inverter should meet the following requirements:

- The transformer may be a distribution transformer, and it must be designed for the typical cyclical loads of a PV system (load in the day and no load at night).
- The transformer may be of the liquid-immersed type or dry type, and shield winding is not necessary.
- The line-to-line voltage on the LV side of the transformer should endure the output voltage of inverter. When the transformer is connected to to the IT grid, to-ground withstanding voltage of the LV winding of the transformer, the AC cables, and the secondary equipment (including the relay protection device, detection & measuring device, and other related auxiliary devices) should not be lower than 1,100V.
- The line-to-line voltage on the HV side of transformer should comply with local power grid voltage.
- A transformer with a tap changer on the HV side is recommended in order to keep consistent with the grid voltage.
- At an ambient temperature of 45℃, the transformer can run in 1.1 times of load for long time.
- Transformer with a short-circuit impedance 6% (permissible tolerance: ±10%) is recommended.
- The voltage drop of system cable is no more than 3%.
- The DC component that the transformer can withstand is 1% of the fundamental current at rated power.
- For thermal rating, the load curve of the transformer and environment conditions should be taken into account.
- The apparent power of the inverter should never exceed the power of the transformer. The maximum AC current of all inverters connected in parallel must be taken into account. If more than 28 inverters are connected to the grid, contact SUNGROW.
- The transformer must be protected against overloading and short circuit.

- The transformer is an important part of grid-connected PV generation system. The fault tolerance capacity of the transformer should be taken into account at all times. The fault include: system short circuit, grounding fault, voltage drop, etc.
- Take ambient temperature, relative humidity, altitude, air quality, and other environmental conditions into account when selecting and installing the transformer.
- When the anti-PID function is enabled, observe the following items:
  - If the LV side winding is in Y shape, neutral point grounding is prohibited.
  - Surge protective devices (SPD) for the AC combiner box and on the LV side of the transformer are recommended to be connected in the "3+1" manner, as shown in the figure below. The Min. continuous operating voltages of M1-M4 are 750VAC.
  - The LV side winding of the transformer, AC cables, and secondary devices (-including protective relay, detection and measurement instruments, and related auxiliary devices) must withstand the voltage to ground of at least 906V.

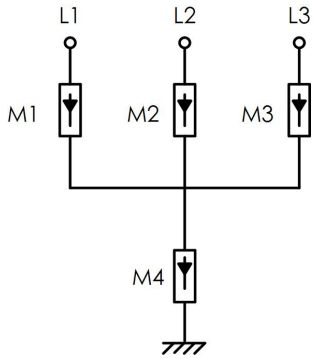


### 5.6.2 Requirements for OT/DT Terminal

OT/DT terminals (not included in the delivery scope) are required for fixing AC cables to the terminal block. Purchase the OT/DT terminals according to the following requirements.

**OT/DT Terminals of Phase Wire**

- Specification: M12;
- Dimensions: a≤46mm / 13mm≤b≤15.5mm / c≤22mm

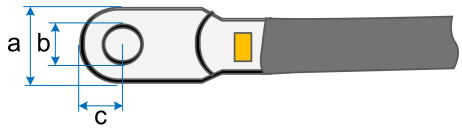


**figure 5-2** Dimensions of Terminal

**OT/DT Terminal of PE Wire**

- Specification: M8 / M10.

### 5.6.3 Aluminium Cable Requirements

If an aluminium cable is selected, use a copper to aluminium adapter terminal to avoid direct contact between the copper bar and the aluminium cable.

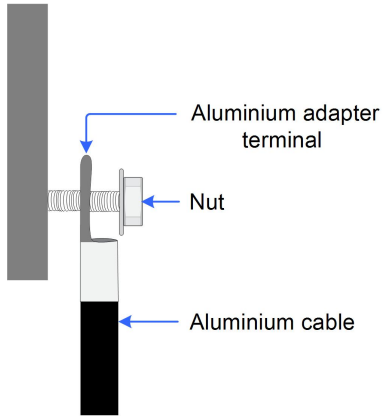


**figure 5-3** Aluminium cable terminal connection sequence

**NOTICE**

**Ensure that the selected terminal can directly contact with the copper bar. If there are any problems, contact the manufacturer of terminal.**
**Direct contact between the copper bar and the aluminium cable will cause electrochemical corrosion and impair the reliability of electrical connection.**

### 5.6.4 Connection Procedure

In this manual, description is given by using five-core cable as an example. The wiring method of the four-core cable is the same.

**step 1** Open the wiring compartment. For details, refer to"5.5 Opening the Wiring Compartment".

**step 2** Disconnect the AC-side circuit breaker and prevent it from inadvertent reconnection.

**step 3** Loosen the swivel nut of the AC waterproof connector and select a seal according to the cable outer diameter. Lead the cable through the swivel nut, seal, and wiring terminal successively.

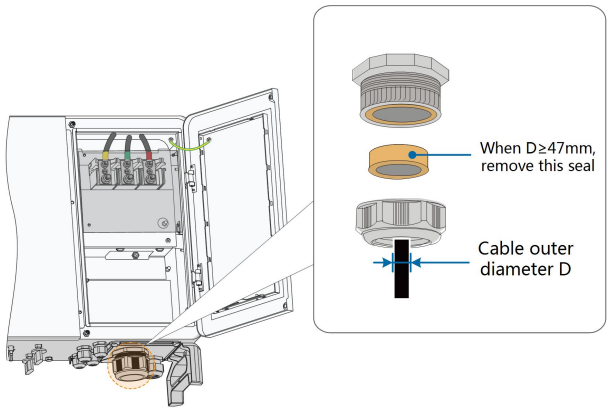


**step 4** Remove the protection cover and store the released screws properly.

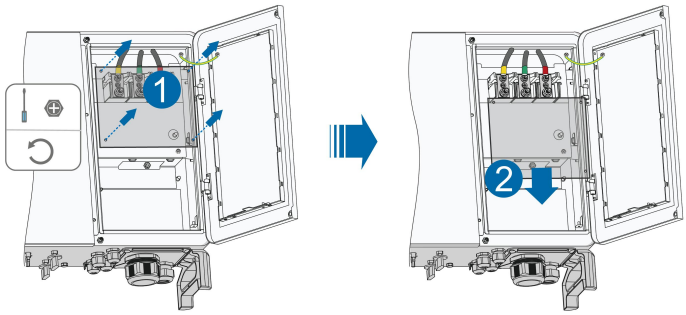


**step 5** Strip the protection layer and insulation layer by specific length, as described in the figure below.

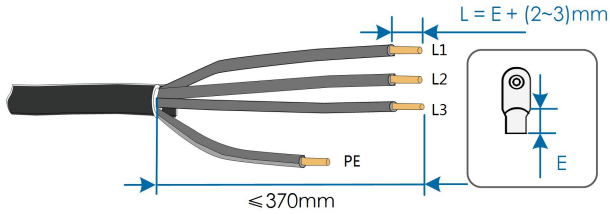


**step 6** If wiring of tracking system power cable is required, refer to"5.8 Wiring of Tracking System Power Cable (Optional)" . Otherwise, skip performing this step.

**step 7** Make the cable and crimp OT/DT terminal.

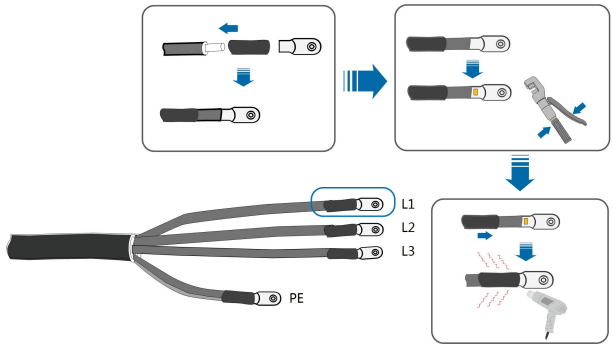

**step 8** Secure the wires to corresponding terminals.

**NOTICE**

**Note the terminal positions of PE wire and N wire. If a phase wire is connected to the PE terminal or N terminal, unrecoverable damage may be caused to the inverter.**

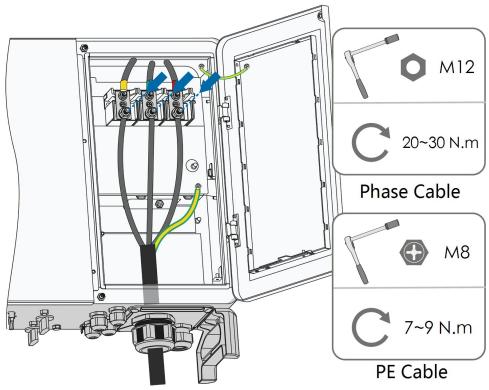


Ensure that the depth L of the socket used is not less than 28mm.

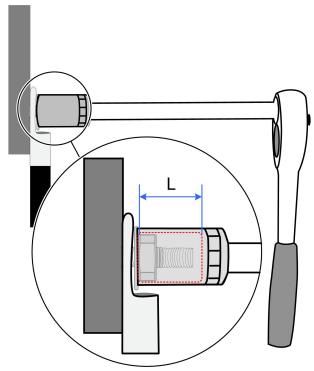


**step 9** Gently pull the cable backwards to ensure firm connection, and fasten the swivel nut clockwise.

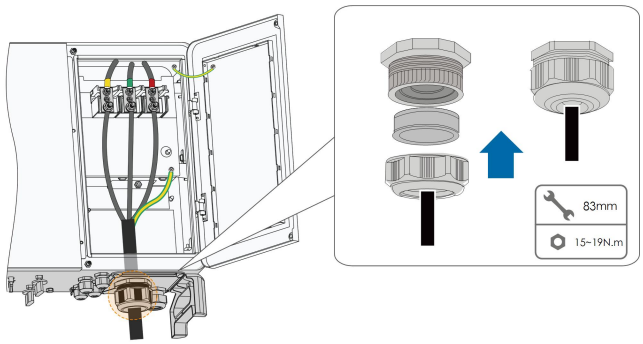

**NOTICE**

If the PE cable is an independent single-core cable, it is inserted into the cabinet through the standby grounding terminal.

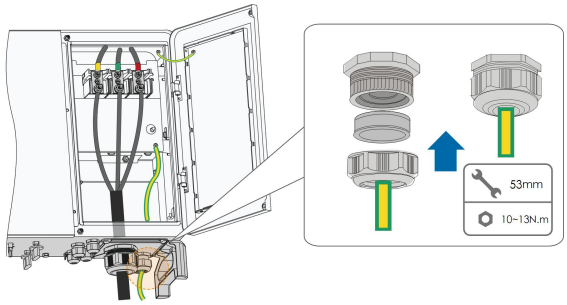


**step 10** Install the protection cover

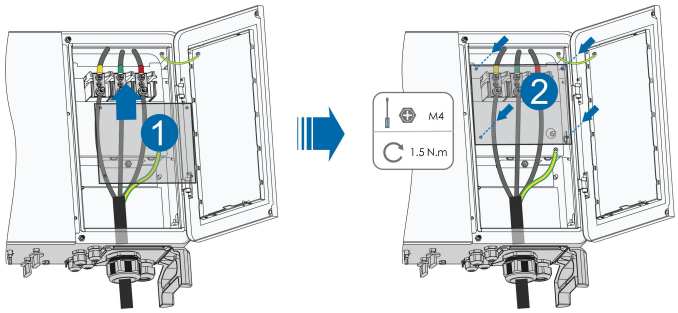


- - End

## 5.7 DC Cable Connection

**DANGER**

Electric shock!
The PV array will generate lethal high voltage once exposed to sunlight.

**CAUTION**

Make sure the PV array is well insulated to ground before connecting it to the inverter.

**NOTICE**

**There is a risk of inverter damage! The following requirements should be met. Failure to do so will void guarantee and warranty claims.**

- **Make sure the maximum voltage of each string is always less than 1500 V.**
- **Make sure the maximum short circuit current on the DC side is within the permissible range.**

### 5.7.1 PV Input Configuration

As shown in the figure below, the inverter is provided with multiple PV inputs: PV inputs 1~12; and each PV input is designed with an MPP tracker.

Each PV input operates independently and has its own MPPT. In this way, string structures of each PV input may differ from each other, including PV module type, number of PV modules in each string, angle of tilt, and installation orientation.

Each PV input area includes two DC inputs DC1 and DC2. For the best use of DC power, DC1 and DC2 should be the same in PV string structure, including the type, number, tilt, and orientation of the PV modules.

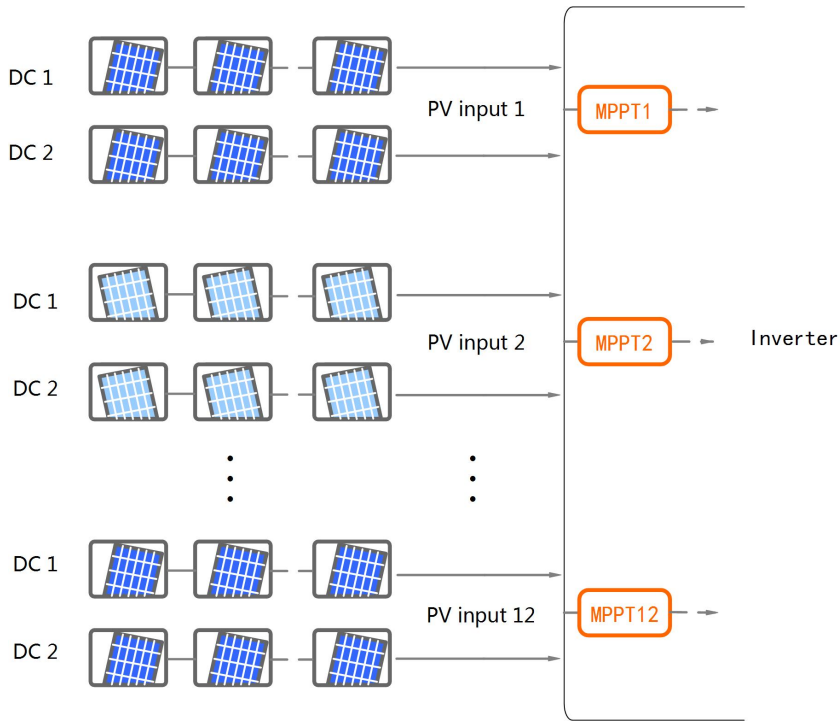


| Open circuit voltage limit | Max. current for input connector |
|---|---|
| 1,500V | 30A |

### 5.7.2 Connection Procedure

SUNGROW provides corresponding plug connectors in the scope of delivery for quick connection of PV inputs.

DC cables should be connected to the inverter via PV connectors which are included in the scope of delivery.

To ensure IP66 protection, use only the supplied connector or the connector with the same ingress of protection.

**DANGER**

**High voltage may be present in the inverter!**

- **Ensure all cables are voltage-free before performing electrical operations.**
- **Do not connect the AC circuit breaker before finishing electrical connection.**

**NOTICE**

**Use the MC4 EVO2 PV connecters within the scope of delivery. Damage to the device due to the use of incompatible terminal shall not be covered by the warranty.**

**step 1** Strip the insulation from each DC cable.

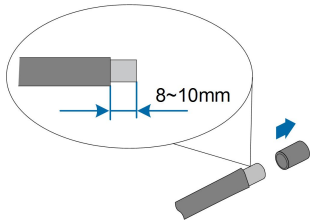


**step 2** Assemble the cable ends with the crimping pliers.

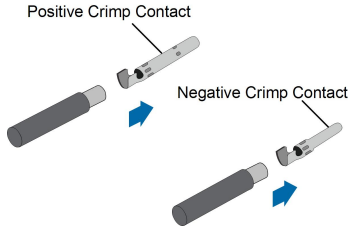


**step 3** Insert the crimped cables into the corresponding connectors until they snap into place. Gently pull the cable backward to ensure firm connection.

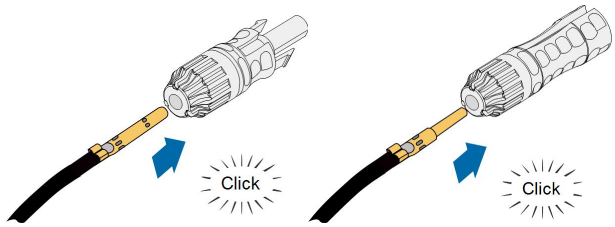


**step 4** Tighten the cable gland and the insulator.

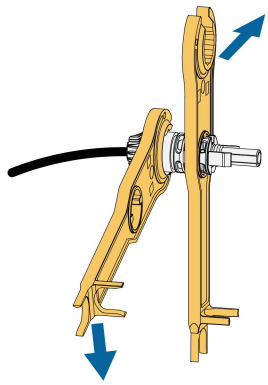

**step 5** Check for polarity correctness.

| NOTICE |
| --- |
| **The inverter will not function properly if any PV polarity is reversed.** |

- - End

### 5.7.3 Installing the PV Connectors

**step 1** Rotate all the DC switches to "OFF" position.

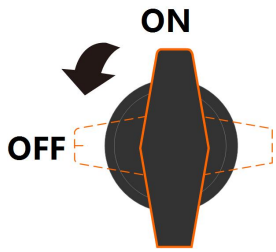


Skip performing step1 when the actual device is not equipped with DC switches.

**step 2** Check the cable connection of the PV string for polarity correctness and ensure that the open circuit voltage in any case does not exceed the inverter input limit of 1,500V.

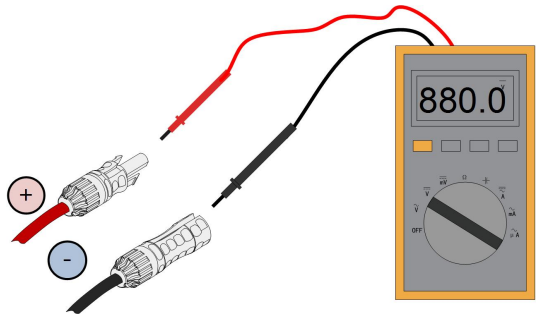


**step 3** Connect the PV connectors to corresponding terminals until there is an audible click.

**NOTICE**

**Check the positive and negative polarity of the PV strings, and connect the PV connectors to corresponding terminals only after ensuring polarity correctness.**

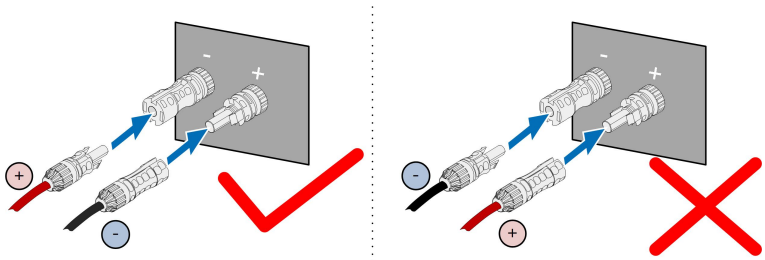


**Arc or contactor over temperature may occur if the PV connectors are not firmly in place, and SUNGROW shall not be held liable for any damage caused.**

**step 4** Follow the foregoing steps to connect PV connectors of other PV strings.

**step 5** Seal the unused PV terminals with the terminal caps.

**- - End**

## 5.8 Wiring of Tracking System Power Cable (Optional)

**step 1** Lead the AC cable into the wiring compartment according to Step 1 to Step 4 described in "5.6.4 Connection Procedure".

**step 2** Loosen the swivel nut of the communication terminal and select an appropriate seal according to cable outer diameter. Lead the cable through the swivel nut and seal successively.

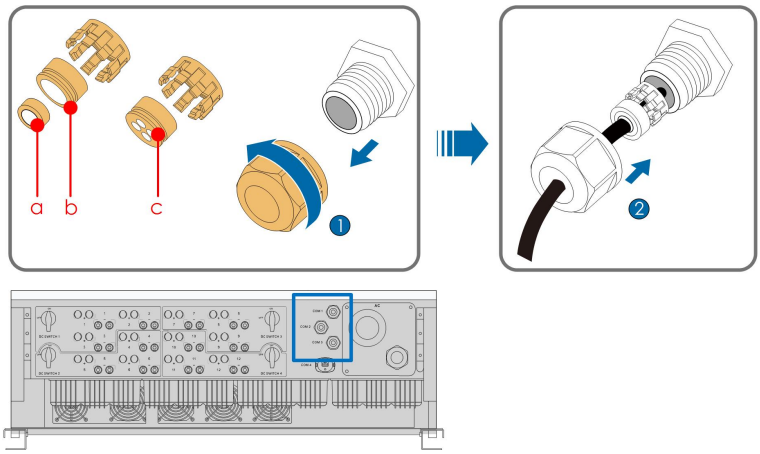


| Outer diameter D(mm) | Seal |
|---|---|
| 4.5~6 | c |
| 6~12 | a+b |
| 13~18 | b |

**step 3** Remove the protection cover and store the released screws properly.

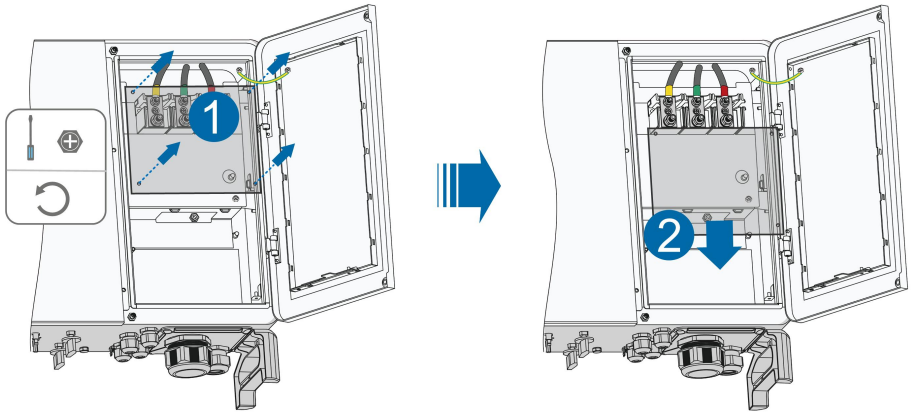


**step 4** Strip the protection layer and insulation layer by specific length, as described in the figure below.

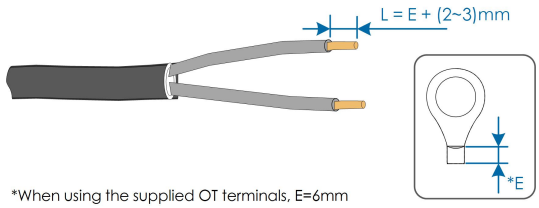


**step 5** Install the OT terminal and press it tight.

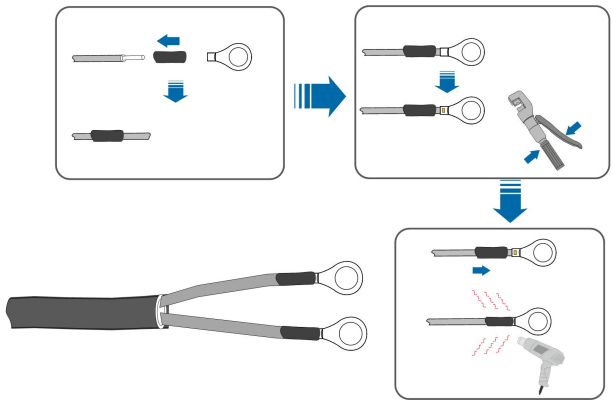

**step 6** Stack the OT terminals on the OT/DT terminal of the AC cables, and fix the cables to corresponding terminals.

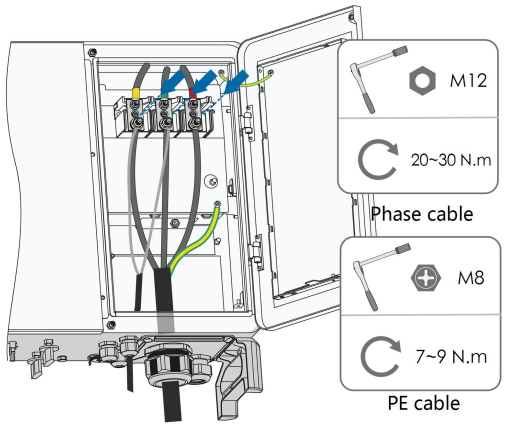


**DANGER**

**Ensure that OT terminals of the power cable are installed on the OT/DT terminals of the AC cable. Otherwise, it will cause over heat or even burn.**

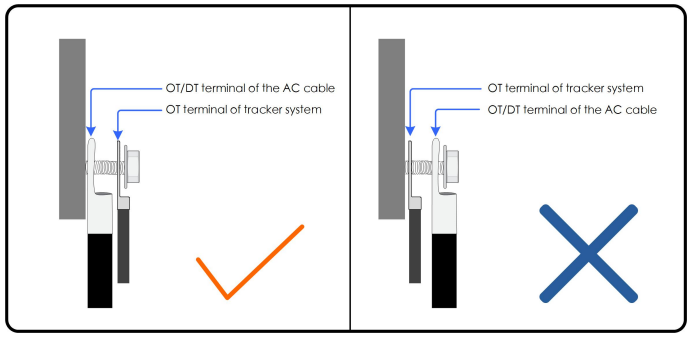


**step 7** Gently pull the cable backwards to ensure firm connection, and fasten the swivel nut clockwise.

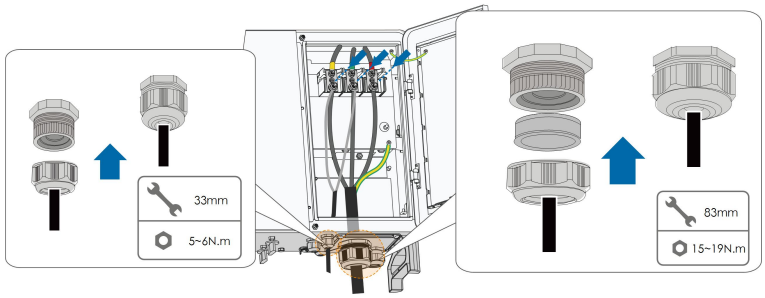


**step 8** Install the protection cover

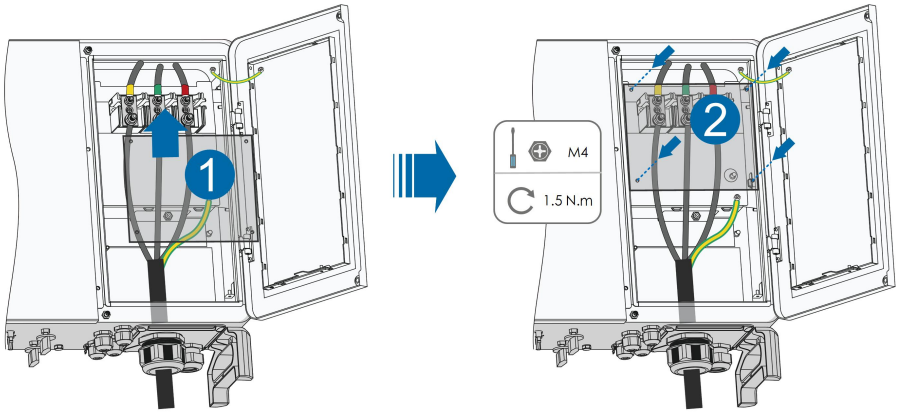


- - End

There are four communication terminals COM1, COM2,COM3 and COM4 on the bottom of the inverter. Select the communication terminal according to onsite conditions.

Disconnector (⩾540V) and fuse (16A, gM) should be installed between the inverter and the tracking system control cabinet.

Length of the cable connecting the internal wiring terminal of the inverter and the fuse should be less than 2.5m.

## 5.9 RS485 Communication

### 5.9.1 Interface Description

The following figure shows the position of the communication wiring board in the inverter as well as the terminals equipped for the wiring board.

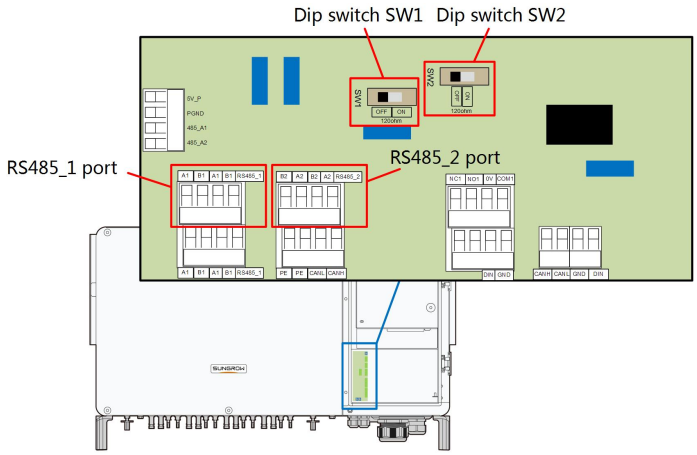


The inverter is equipped with two groups of RS485 communication interfaces for external communication connection.

The port RS485_1 is used to connect Logger, so as to implement data exchange with PC or other monitoring devices. The port RS485_2 is used to connect communication device of the tracking system, so as to implement data exchange with the tracking system. Terminal definitions of the two ports are as follows:

**table 5-4** RS485_1 port terminal definition

| No. | Definition |
|---|---|
| A1 | RS485 A IN, RS485A differential signal+ |
| B1 | RS485 B IN, RS485B differential signal- |
| A1 | RS485 A OUT, RS485A differential signal+ |
| B1 | RS485 B OUT, RS485B differential signal- |

**table 5-5** RS485_2 port terminal definition

| No. | Definition |
|---|---|
| B2 | RS485 B OUT, RS485B differential signal- |
| A2 | RS485 A OUT, RS485A differential signal+ |
| B2 | RS485 B IN, RS485B differential signal- |
| A2 | RS485 A IN, RS485A differential signal+ |

The terminal block interface and RJ45 interface have the same function with only wiring manner different. Select either interface for cable connection.

**NOTICE**

**The RS485_1 interface is marked as SW2.**

### 5.9.2 RS485 Communication System

**Single-inverter communication system**

In case of a single inverter, communication cable connection requires only one RS485 cable.

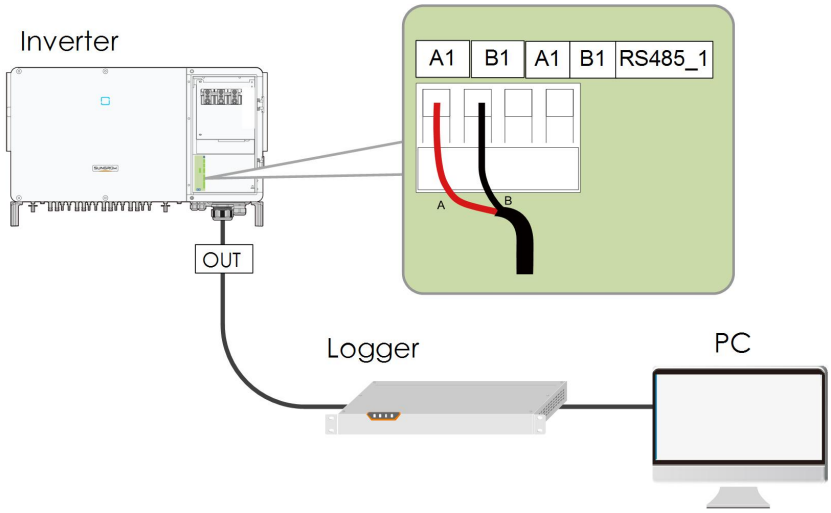


**Multi-inverter communication system**

In case of multiple inverters, all the inverters can be connected via RS485 cables in the daisy chain manner. The communication cable of the tracking system can be connected to the port RS485_2 of any inverter in the daisy chain.

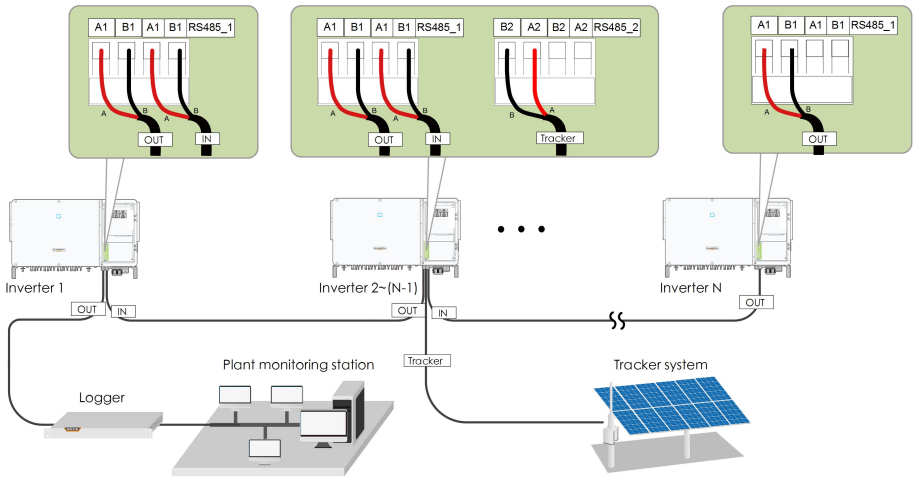


When more than 15 inverters are connected on the same daisy chain, configure the RS485- dip switches of the inverters on two ends of the chain (RS485_1 is corresponding to SW2, and RS485_2 is corresponding to SW1), to ensure communication quality.

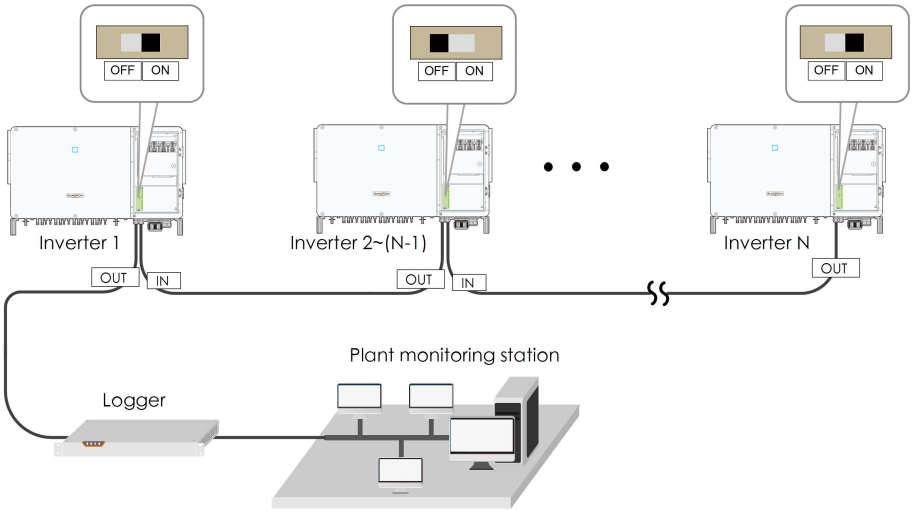


**figure 5-4** Configuration of dip switch (N⩾15)

> The length of the RS485 cable should be no longer than 1,200m.
>
> If multiple inverters are connected to the data collectorLogger3000, the number of permissible daisy chains and the number of devices allowed to be connected should meet the requirements (refer to the user manual for the Logger3000).

### 5.9.3 Connection Procedure(Terminal Block)

> RS485 communication cables should be shielded twisted pair cables or shielded twisted pair Ethernet cables.
>
> There are four RS485 communication terminals COM1, COM2, COM3and COM4 on the bottom of the inverter. Please choose according to the actual situation.

**step 1** Strip the protection layer and insulation layer by appropriate length.

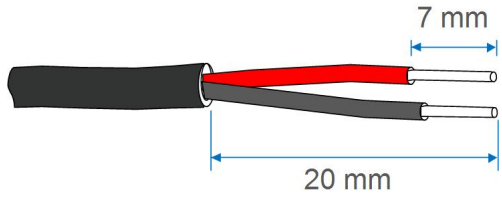


**step 2** Loosen the swivel nut of the communication terminal and select an appropriate seal according to cable outer diameter. Lead the cable through the swivel nut and seal successively.

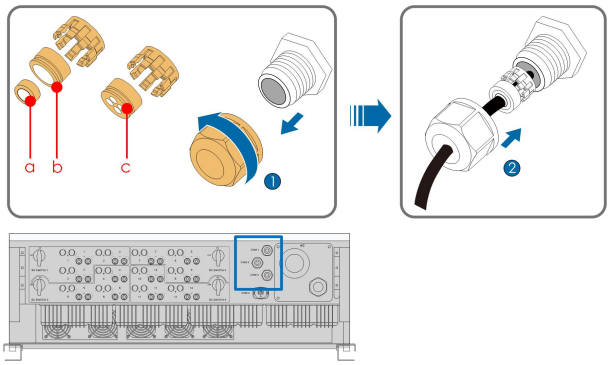


| Outer diameter D(mm) | Seal |
|---|---|
| 4.5~6 | c |
| 6~12 | a+b |
| 12~18 | b |

**step 3** Secure the cable to the terminal base.

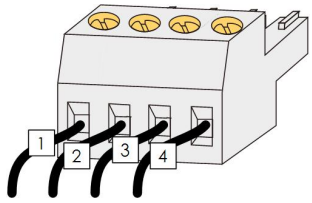


**step 4** Insert the terminal base into the corresponding terminal.

**step 5** Pull the cable gently to make sure it is secured, tighten the swivel nut clockwise.

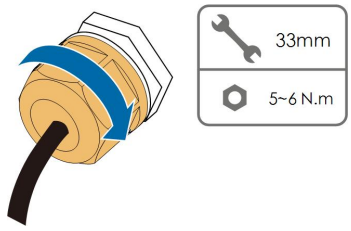


- - End

## 5.10 PLC Communication Connection

With a PLC communication module built inside, the inverter can communicate with the PLC BOX provided by SUNGROW. For specific wiring method, refer to the PLC BOX user manual.

- In case of PLC communication, the AC cable must be a multi-core cable rather than multiple single-core cables.
- The PLC Box is an optional device that can be ordered from Sungrow.
- The PLC Box conducts data communication by directly using the AC output cable of the inverter and thus saves the trouble to lay and maintain the special communication cables. The RS-485 port of the PLC Box supports the transparent transmission of the MODBUS-RTU and is completely compatible with the monitoring devices and software of the original RS-485 communication method.

## 5.11 Dry Contact Connection

**NOTICE**

**Dry contact cables require a cross section of 1 mm² to 1.5 mm².**
**The connection procedure of the dry contact is the same as that of the RS485 terminal block.**

### 5.11.1 Dry Contact Function

The configuration circuit board is provided with fault output dry contact and emergency stop dry contact, as shown in the figure below.
Connection method of the dry contacts is similar to that of the RS485 terminal block.

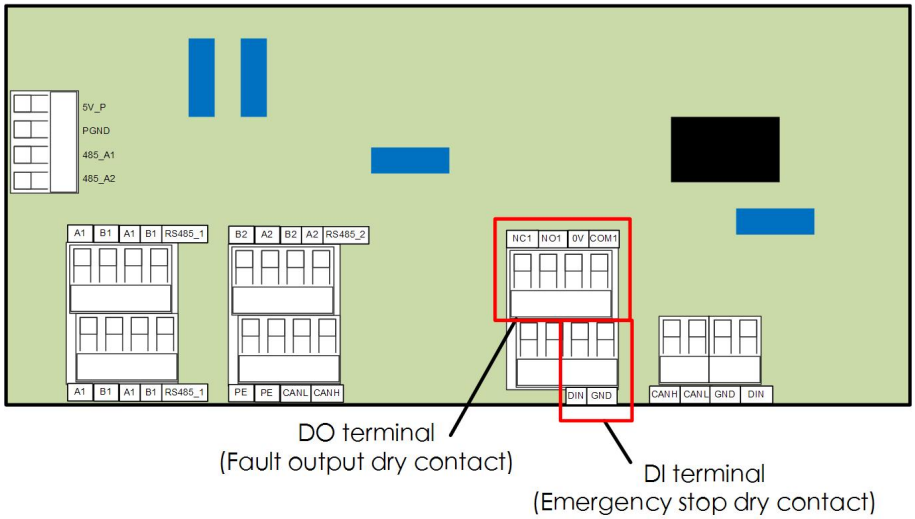


**DO terminal (fault output dry contact):** the relay can be set to fault alarm output, and user can configure it to be a normal open contact (COM & NO) or a normal close contact (COM & NC).
The relay is initially at the NC terminal, and it will trip to another contact when a fault occurs.

Use LED indicators or other equipment to indicate whether the inverter is in the faulty state. The following figures show the typical applications of normal open contact and normal close contact:

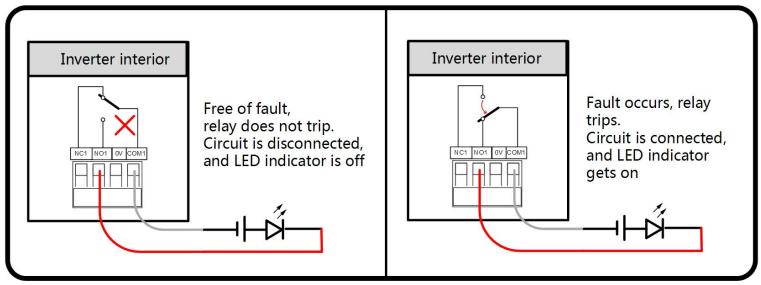


**figure 5-5** Normal open contact

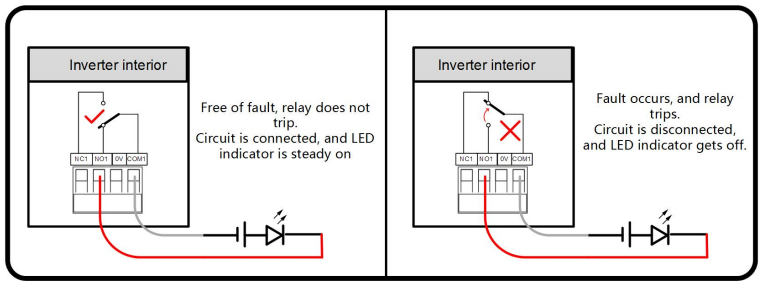


**figure 5-6** Normal close contact

Devices connected to the relay should comply with related requirements:

| AC-Side Requirements | DC-Side Requirements |
|---|---|
| Max. voltage: 250Vac | Max. voltage: 30Vdc |
| Max. current: 5A | Max. current: 5A |

**DI terminal (emergency stop dry contact):** the dry contact can be configured to be an emergency stop contact.

When the DI contact and GND contact are shorted by external controlled switch, the inverter will immediately stop.

> The dry contacts only support passive switch signal input.

The following figure shows the typical application of local stop dry contact.

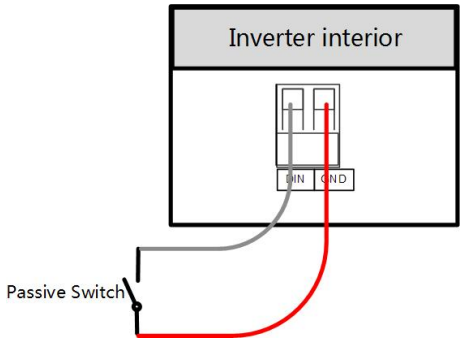


**figure 5-7** Local stop contact

When wiring DI dry contacts, ensure that the maximum wiring distance meet the requirements in "10.2 Wring Distance of DI Dry Contact".

### 5.11.2 Wiring Procedure

Refer to the wiring of terminal block described in chapter"5.9.3 Connection Procedure(-Terminal Block)".

## 5.12 Closing the Wiring Compartment

**step 1** Release the limit lever.

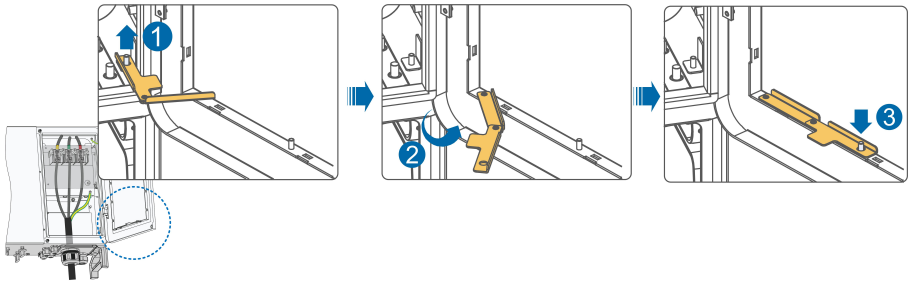

**step 2** Close the wiring compartment and tighten the two screws on its front cover with supplied Allen wrench.

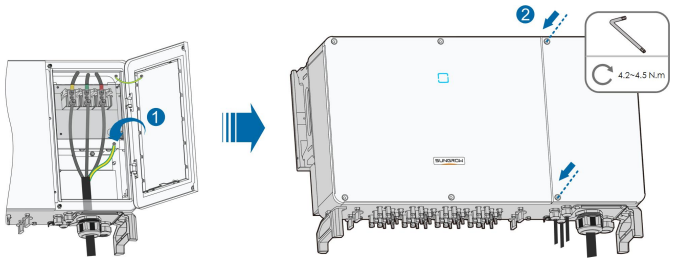


**NOTICE**

**In case the screws on the cover are missing, you can find spare ones in the scope of delivery.**

- - End

# 6 Commissioning

## 6.1 Inspection before Commissioning

Check the following items before starting the inverter:

- The inverter DC switch and external circuit breaker are disconnected.
- The inverter should be accessible for operation, maintenance and service.
- Nothing is left on the top of the inverter.
- The inverter is correctly connected to the external devices, and the cables are routed in a safe place or protected against mechanical damage.
- The selection of the AC circuit breaker is in accordance with this manual and all applicable local standards.
- All unused terminals at the bottom of the inverter are properly sealed.
- Warning signs & labels are suitably affixed and durable.

## 6.2 Commissioning Procedure

If all of the items mentioned above meet the requirements, proceed as follows to start up the inverter for the first time.

**step 1** Rotate the DC switch of the inverter to "ON" position.

**step 2** Connect the AC switch (if applicable) between the inverter and the grid.

**step 3** Connect the DC switch (if applicable) between the inverter and the PV string.

**step 4** Set initial protection parameters via the iSolarCloud App. For details, please refer to “7.4.2 Login Steps”. If the irradiation and grid conditions meet requirements, the inverter will normally operate.

**step 5** Observe the LED indicator to ensure that the inverter operates normally. (Refer to Tab. 2-2LED indicator description).

**- - End**

# 7 iSolarCloud App

## 7.1 Brief Introduction

The iSolarCloud App can establish communication connection to the inverter via the Bluetooth, thereby achieving near-end maintenance on the inverter. Users can use the App to view basic information, alarms, and events, set parameters, or download logs, etc.

*In case the communication module Eye or WiFi is available, the iSolarCloud App can also establish communication connection to the inverter via the mobile data or WiFi, thereby achieving remote maintenance on the inverter.

> This manual describes only how to achieve near-end maintenance via the Bluetooth connection. For remote maintenance through the Eye or WiFi, refer to the related manuals in the delivery scope.
>
> Screenshots in this manual are based on the Android system V2.1.6, and the actual interfaces may differ.

## 7.2 Download and Install

**Method 1**

Download and install the App through the following application stores:

- MyApp (Android, mainland China users)
- Google Play (Android, users other than mainland China ones)
- App store (iOS)

**Method 2**

Scan the following QR code to download and install the App according to the prompt information.

The App icon appears on the home screen after installation.

iSolarCloud

## 7.3 Function Overview

The App provides parameter viewing and setting functions, as shown in the following "-figure 7-1 App function tree map".

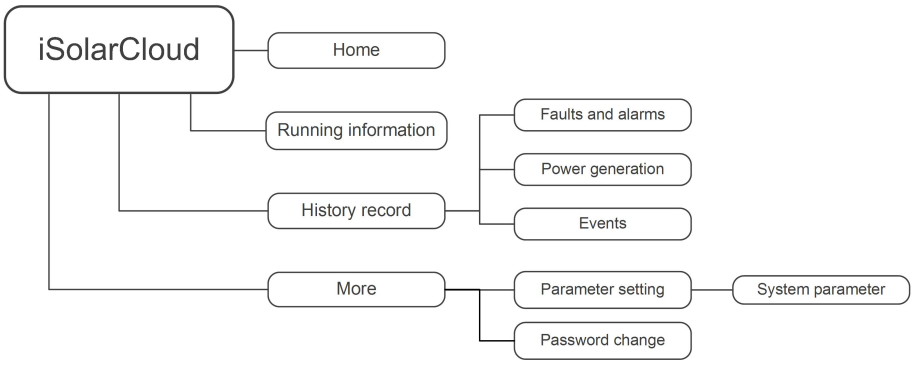


**figure 7-1** App function tree map

## 7.4 Login

### 7.4.1 Requirements

The following items should meet requirements:

- The AC and DC sides or the AC side of the inverter is powered-on.
- The mobile phone is within 5m away from the inverter and there are no obstructions in between.
- The Bluetooth function of the mobile phone is enabled.

### 7.4.2 Login Steps

**step 1** Open the App to enter the login page, click on "Local Access" at the bottom of the page to go to the next page.

**step 2** Click on "Bluetooth", after which the Bluetooth search screen pops up automatically, and select the to-be-connected inverter according the SN on the nameplate of the inverter. The Bluetooth indicator gets on once the connection is established. Alternatively, tap " " to scan the QR code on the side of the inverter to establish Bluetooth connection.

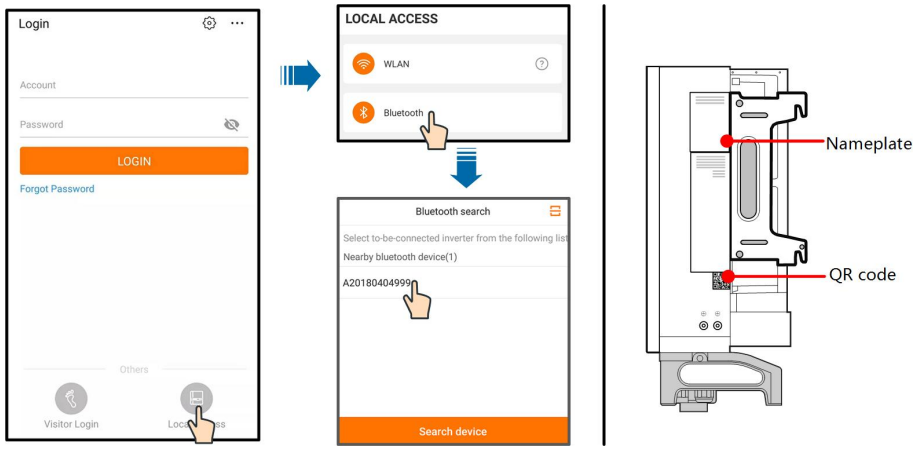


**figure 7-2** Bluetooth connection

**step 3** Enter the login screen after the Bluetooth connection is established.

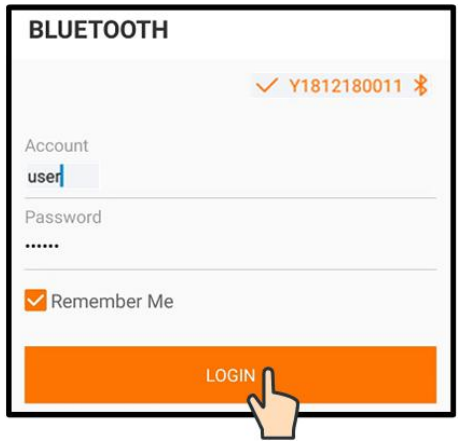


**figure 7-3** Login

The username is "user", and the initial password is "pw1111" or "111111" which should be changed for the consideration of account security.

To set inverter parameters related to grid protection and grid support, contact SUNGROW to obtain the advanced account and corresponding password.

**step 4** If the inverter is not initialized, you will enter the quick setting screen of initialize protection parameter. After finishing setting on the quick setting screen, click "Boot" and the device will be initialized. The App will send start instructions and the device will start and operate.

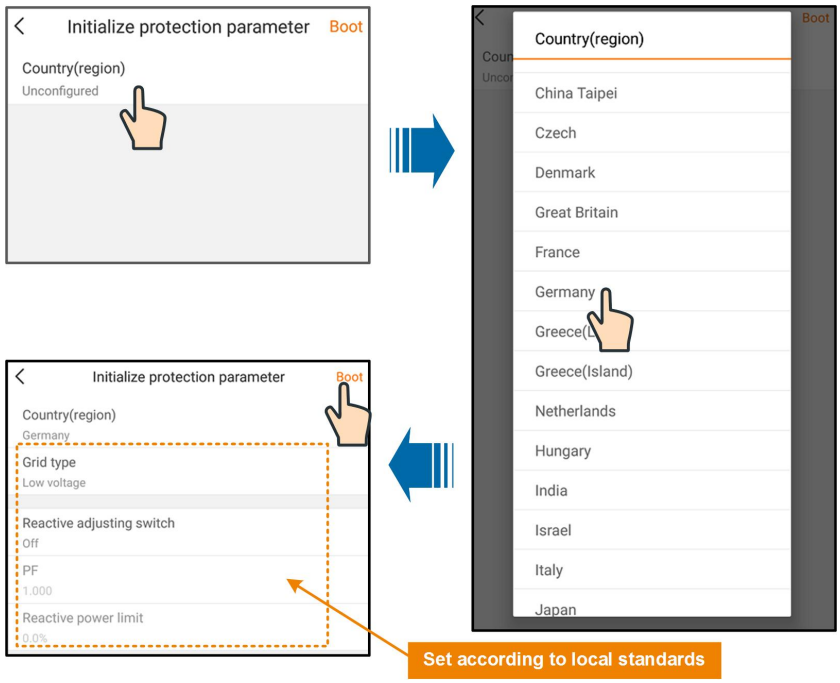


**figure 7-4** Initialization protection parameter

**NOTICE**

**Reset the protection parameters if the country setting is incorrect. Otherwise, fault may occur.**

In the European region, such as Netherlands, Sweden, Denmark, whose grid code complies with EN50549, select the parameter EN50549_1 (LV grid-connection) or EN50549_2 (MV grid-connection).

In the Brazilian region, set the country code to "Brazil". Selecting "Brazil_230" or "Brazil_240" will cause setting failure.

**step 5** If the inverter is initialized, the App automatically turns to its home page.

- - End

## 7.5 Home page

After login, the home page is as follows:

**figure 7-5** Home page

**table 7-1** Home page description

| No. | Designation | Description |
|---|---|---|
| 1 | Date and time | System date and time of the inverter |
| 2 | Inverter state | Present operation state of the inverter For details, refer to Tab. 7-2Description of inverter state. |
| 3 | PID function state | Present state of the PID function For details, refer to Tab. 7-3Description of PID function state |
| 4 | Power flow chart | Display the PV power generation power, feed-in power, etc. The line with an arrow indicates energy flow between connected devices, and the arrow pointing indicates energy flow direction. |
| 5 | Power generation | Today power yield and accumulative power yield of the inverter |
| 6 | Real-time power | Output power of the inverter |
| 7 | Power curve | Curve showing change of power between 5 am and 23 pm every day<br>(Each point on the curve represents the percentage of present inverter power to rated power) |
| 8 | Navigation bar | Including "Home", "Run-info", "His-record", and "More" |

table 7-2 Description of inverter state

| State | Description |
|---|---|
| Run | After being energized, inverter tracks the PV arrays' maximum power point (MPP) and converts the DC power into AC power. This is the normal operation mode. |
| Stop | Inverter is stopped. |
| Key-stop | Inverter will stop operation by manually "stop" via app. In this way, inverter internal DSP stops. To restart the inverter, manually start via app. |
| Standby | Inverter enters standby mode when DC side input is insufficient. In this mode inverter will wait within the standby duration. |
| Initial standby | The inverter is in the initial power-on standby state. |
| Starting | The inverter is initializing and synchronizing with the grid. |
| Warning | Warning information is detected. |
| Derating running | The inverter derates actively due to environmental factors such as temperature or altitude |
| Scheduling running | The inverter runs according to the scheduling instructions received from the monitoring background |
| Fault | If a fault occurs, inverter will automatically stop operation, and disconnect the AC relay. The fault information will be displayed in the app. Once the fault is removed in recovery time, inverter will automatically resume running. |

table 7-3 Description of PID function state

| State | Description |
|---|---|
| PID recovery running | The inverters perform PID recovery actively. |
| PID abnormity | It is detected that the ISO impedance is abnormal or the PID function cannot work normally after the PID function enabled. |

If the inverter is running abnormally, the alarm or fault icon will be displayed in the lower right corner of the inverter icon in power flow chart. The user can tap this icon to enter the alarm or fault screen to view detailed information and corrective measures.

## 7.6 Running Information

Tap "Run Information" on the navigation bar to enter the running information screen, as shown in the following figure.

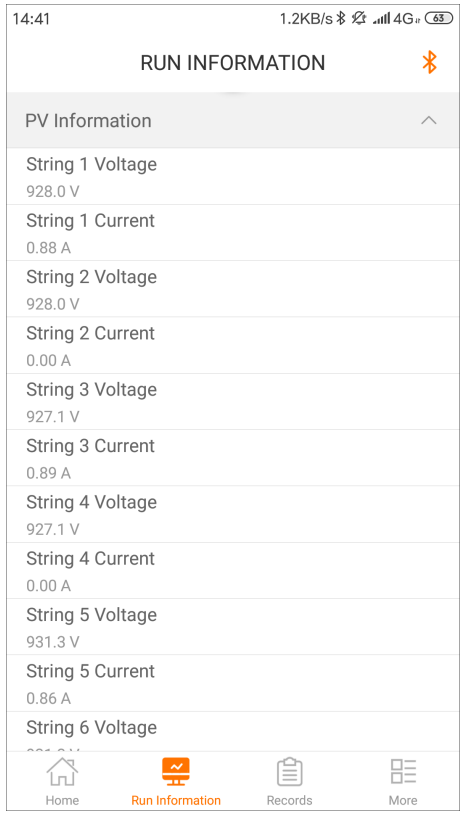


**figure 7-6** Running Information

The run information includes the PV information, inverter information, input and output information.

**table 7-4** Run information

| Classification | Parameter | Description |
|---|---|---|
| PV Information | String n Voltage | The input voltage of the $n^{th}$ string |
| | String n Voltage | The input current of the $n^{th}$ string |
| Inverter Information | Total On-grid Running Time | / |
| | Daily On-grid Running Time | / |
| | Negative Voltage to Ground | Inverter DC side negative to ground voltage value |
| | Bus Voltage | Voltage between the positive and negative poles of the DC side of the inverter |
| | Internal Air Temperature | / |

| Classification | Parameter | Description |
|---|---|---|
| | Array Insulation Resistance | Insulation resistance value of the input side to the protection ground |
| | Country Information | / |
| | Power Limitation Mode | / |
| | Reactive Power Mode | / |
| Input | Total DC Power | DC side total input power |
| | MPPT x Voltage | The input voltage of the $x^{th}$ MPPT |
| | MPPT x Current | The input current of the $x^{th}$ MPPT |
| Output | Daily Yield | / |
| | Monthly Yield | / |
| | Annual Yield | / |
| | Total Active Power | Current active power value of the inverter |
| | Total Reactive Power | Current reactive power value of the inverter |
| | Total Apparent Power | Current apparent power value of the inverter |
| | Total Power Factor | Power factor of the AC side of the inverter |
| | Gird Frenquency | Frequency of the AC side of the inverter |
| | A-B Line Voltage | Line Voltage |
| | B-C Line Voltage | |
| | C-A Line Voltage | |
| | Phase A Current | Phase Current |
| | Phase B Current | |
| | Phase C Current | |

## 7.7 History Record

Tap " Records " on the navigation bar to enter the history record screen, as shown in the following figure.

**figure 7-7** History record

On "history record" screen, users can check the alarm records, power yield records and event records.

### 7.7.1 Fault Alarm Records

Tap "⚠ Alarm records " to view fault and alarm records, as shown in the following figure.

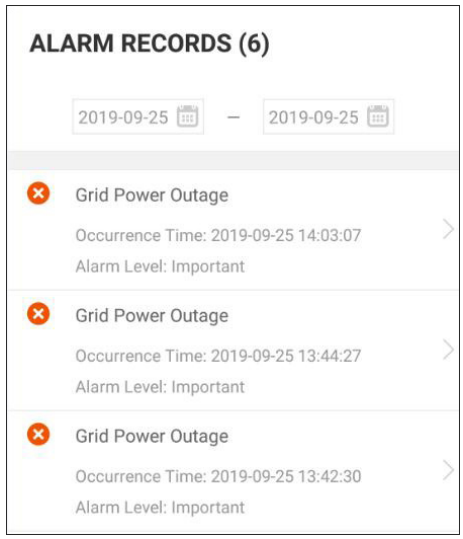


**figure 7-8** Fault and alarm records

- Click " " to select a time segment and view corresponding records.
- The inverter can record up to 400 latest entries.

Select one of the records in the list and click the record, to view the detailed fault info as shown in following figure.

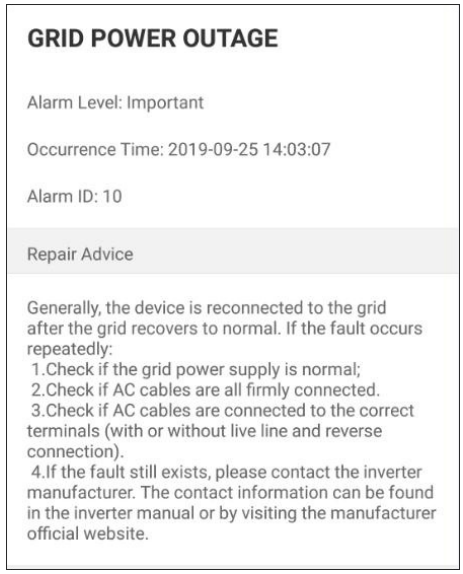


**figure 7-9** Detailed fault alarm info

### 7.7.2 Power Yields Records

User can view various energy records: power curve, daily energy histogram, daily energy histogram, monthly energy histogram, and annual energy histogram.

**table 7-5** Explanation of power yields records

| Parameter | Description |
|---|---|
| Power curve | Show the power output from 5 am to 11 pm in a single day. Each point in the curve is the percentage of present power and nominal power. |
| Daily energy histogram | Shows the power output every day in the present month. |
| Monthly energy histogram | Shows the power output every month in a year. |
| Annual energy histogram | Shows the power output every year. |

Click the " Energy records " to view the power curve page as shown in following figure.

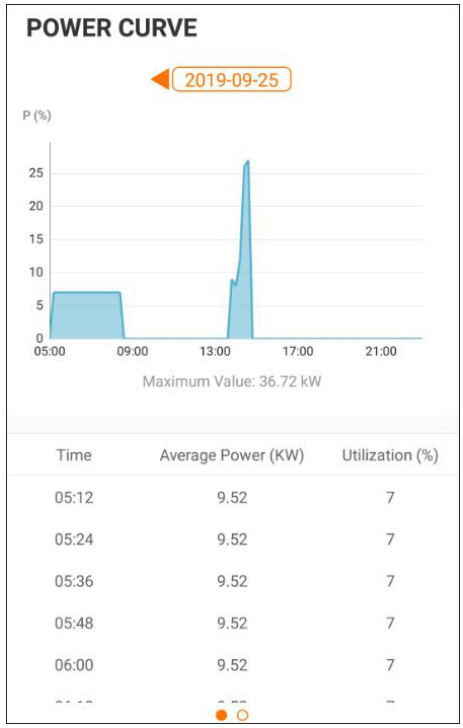


**figure 7-10** Power Curve

Tap the time bar 2019-03-13 on the top of the screen to select a time segment and view the corresponding power curve.

Swipe left to check the power yields histogram

### 7.7.3 Event Records

Click " Event record " to view event record list.

- Click " " to select a time segment and view corresponding event records.
- The inverter can at most record the latest 400 events.

## 7.8 More

Tap " More " on the navigation bar to enter the "More" screen, as shown in the following figure.

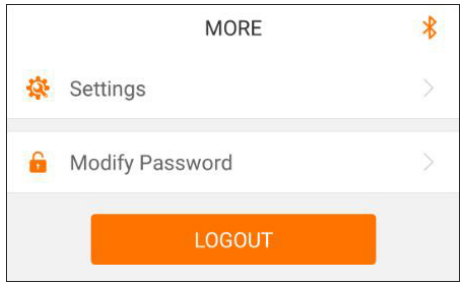


**figure 7-11** More

### 7.8.1 Parameter Setting

Tap "Settings" to enter the parameter setting screen, as shown in the following figure.

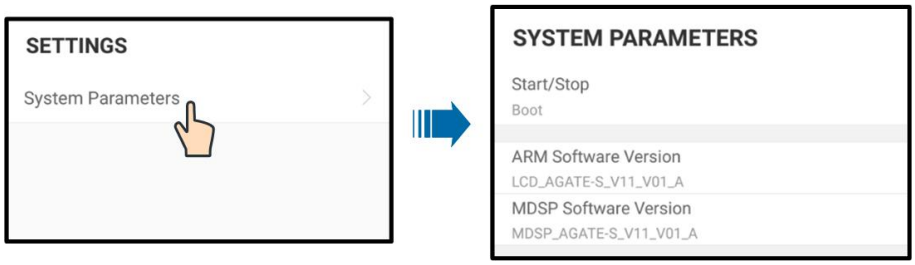


**figure 7-12** Parameter setting

Tap " System parameter " to enter the system parameter screen on which start/stop instruction can be sent to the inverter and information such as ARM version and MDSP version can be viewed.

### 7.8.2 Password Changing

Tap "Modify Password" to enter the modify password screen, as shown in the following figure.

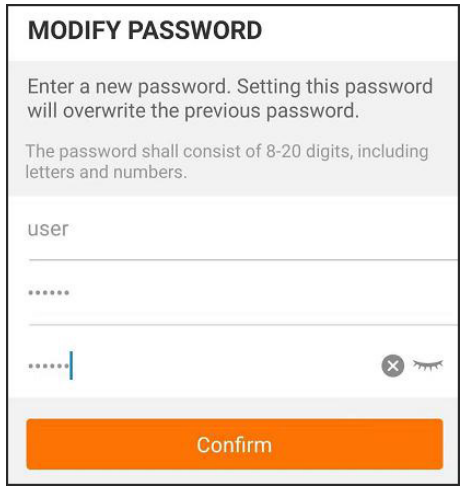


**figure 7-13** Change password

The password shall consisit of 8 – 20 digits, including letters and numbers.

# 8 System Decommissioning

## 8.1 Disconnecting the Inverter

For maintenance or other service work, the inverter must be switched off.

Proceed as follows to disconnect the inverter from the AC and DC power sources. Lethal voltages or damage to the inverter will follow if otherwise.

**step 1** Disconnect the external AC circuit breaker and secure it against reconnection.

**step 2** Rotate the DC switches to the "OFF" position for disconnecting all of the PV string inputs .

**step 3** Wait about 5 minutes until the capacitors inside the inverter completely discharge.

**step 4** Ensure that the DC cable is current-free via a current clamp.

**step 5** Insert a PV terminal wrench into the notch and press the wrench with an appropriate force to remove the DC connector.

**step 6** Ensure that the AC wiring terminals are voltage-free via a multimeter, and remove the AC wires and communication wires.

**step 7** Install the PV terminal waterproof plugs.

For further disconnection and reconnection instructions, please visit the webpage of respective component manufacturer.

- - End

## 8.2 Dismantling the Inverter

**CAUTION**

**Risk of burn injuries and electric shock!**

- **Do not touch any inner live parts until at least 5 minutes after disconnecting the inverter from the utility grid and the PV input.**

**step 1** Refer to "5 Electrical Connection"for the inverter disconnection of all cables in reverse steps.

**step 2** Dismantle the inverter referring to "4 Mechanical Mounting"in reverse steps.

**step 3** If necessary, remove the wall-mounting bracket from the wall.

**step 4** If the inverter will be reinstalled in the future, please refer to "3.4 Inverter Storage"for a proper conservation.

- - End

## 8.3 Disposal of the Inverter

Users take the responsibility for the disposal of the inverter.

**NOTICE**

**Some parts and devices of the inverter, such as the capacitors, may cause environmental pollution.**
**Do not dispose of the product together with household waste but in accordance with the disposal regulations for electronic waste applicable at the installation site.**

# 9 Troubleshooting and Maintenance

## 9.1 Troubleshooting

Once a fault occurs in the inverter, the fault information can be displayed on the App interface.

Fault codes and check methods are as follows:

| Fault code | Description | Check method |
|---|---|---|
| 002 | Grid overvoltage,<br>The grid voltage is higher than the set protection value | Generally, the inverter will be reconnected to the grid after the grid returns to normal. If the fault occurs repeatedly:<br>1. Measure the actual grid voltage, and contact the local electric power company for solutions if the grid voltage is higher than the set value.<br>2. Check whether the protection parameters are appropriately set via the App or the LCD.<br>3. Check whether the cross-sectional area of the AC cable meets the requirement.<br>4. If the fault is not caused by the foregoing reasons and still exists, contact SUNGROW. |
| 003 | Grid transient overvoltage,<br>The transient grid voltage is higher than the standard value. | Generally, the inverter will be reconnected to the grid after the grid returns to normal. If the fault occurs repeatedly, contact SUNGROW. |

| Fault code | Description | Check method |
|---|---|---|
| 004 | Grid undervoltage,<br>The grid voltage is lower than the set protection value | Generally, the inverter will be reconnected to the grid after the grid returns to normal. If the fault occurs repeatedly:<br>1. Measure the actual grid voltage, and contact the local electric power company for solutions if the grid voltage is lower than the set value.<br>2. Check whether the protection parameters are appropriately set via the App or the LCD.<br>3. Check whether the AC cable is firmly in place.<br>4. If the fault is not caused by the foregoing reasons and still exists, contact SUNGROW. |
| 005 | Grid low voltage,<br>The grid voltage is lower than the set protection value | Generally, the inverter will be reconnected to the grid after the grid returns to normal. If the fault occurs repeatedly:<br>1. Measure the actual grid voltage, and contact the local electric power company for solutions if the grid voltage is lower than the set value.<br>2. Check whether the protection parameters are appropriately set via the App or the LCD.<br>3. Check whether the AC cable is firmly in place.<br>4. If the fault is not caused by the foregoing reasons and still exists, contact SUNGROW. |
| 007 | AC instantaneous overcurrent, AC output current exceeds the upper limit of the inverter. | Generally, the inverter will be reconnected to the grid after the grid returns to normal. If the fault occurs repeatedly, contact SUNGROW. |

| Fault code | Description | Check method |
|---|---|---|
| 008 | Grid overfrequency, Grid frequency exceeds the upper limit of the inverter. | Generally, the inverter will be reconnected to the grid after the grid returns to normal. If the fault occurs repeatedly:<br>1. Measure the actual grid frequency, and contact the local electric power company for solutions if the grid frequency is beyond the set range.<br>2. Check whether the protection parameters are appropriately set via the App or the LCD.<br>3. If the fault is not caused by the foregoing reasons and still exists, contact SUNGROW. |
| 009 | Grid underfrequency, Grid frequency is lower than the lower limit of the inverter. | |
| 010 | Grid power outage, AC switch or circuit is disconnected. | Generally, the inverter will be reconnected to the grid after the grid returns to normal. If the fault occurs repeatedly:<br>1. Check whether the grid supplies power reliably.<br>2. Check whether the AC cable is firmly in place.<br>3. Check whether the AC cable is connected to the correct terminal (whether the live wire and the N wire are correctly in place).<br>4. Check whether the AC circuit breaker is connected.<br>5. If the fault is not caused by the foregoing reasons and still exists, contact SUNGROW. |
| 011 | Device anomaly | Wait for the inverter to return to normal.<br>Disconnect the AC and DC switches, and reconnect the AC and DC switches 15 minutes later to restart the inverter.<br>If the fault still exists, contact SUNGROW. |

| Fault code | Description | Check method |
|---|---|---|
| 012 | Excessive leakage current | 1. The fault can be caused by poor sunlight or damp environment, and the inverter will be reconnected to the grid after the environment is improved.<br>2. If the environment is normal, check whether the AC and DC cables are well insulated.<br>3. If the fault is not caused by the foregoing reasons and still exists, contact SUNGROW. |
| 013 | Grid abnormal, the grid voltage or frequency is out of the permissible range, and the inverter cannot be connected to the grid normally. | Generally, the inverter will be reconnected to the grid after the grid returns to normal. If the fault occurs repeatedly:<br>1. Measure the actual grid frequency, and contact the local electric power company for solutions if the grid parameter exceeds the set value.<br>2. If the fault is not caused by the foregoing reasons and still exists, contact SUNGROW. |
| 014 | 10-minute grid overvoltage, the grid voltage exceeds the preset AC voltage of the inverter for a long time. | Wait for the inverter to return to normal.<br>If the fault occurs repeatedly, contact SUNGROW. |
| 015 | Grid overvoltage,<br>The grid voltage is higher than the set protection value | Generally, the inverter will be reconnected to the grid after the grid returns to normal. If the fault occurs repeatedly:<br>1. Measure the actual grid voltage, and contact the local electric power company for solutions if the grid voltage is higher than the set value.<br>2. Check whether the protection parameters are appropriately set via the App or the LCD.<br>3. Check whether the cross-sectional area of the AC cable meets the requirement.<br>4. If the fault is not caused by the foregoing reasons and still exists, contact SUNGROW. |

| Fault code | Description | Check method |
|---|---|---|
| 016 | Output overload, The configured module power is excessively large and out of the normal operation range of the inverter. | Wait for the inverter to return to normal.<br>If the fault still exists, contact SUNGROW. |
| 017 | Grid voltage unbalance, the inverter detects unbalanced three-phase grid voltage | Generally, the inverter will be reconnected to the grid after the grid returns to normal. If the fault occurs repeatedly:<br>1. Measure the actual grid voltage. If grid phase voltages differ greatly, contact the power company for solutions.<br>2. If the voltage difference between the three phases is within the permissible range of the local power company, modify the grid voltage imbalance parameter through the App or LCD screen.<br>3. If the fault is not caused by the foregoing reasons and still exists, contact SUNGROW. |
| 019-020 | Device anomaly | Wait for the inverter to return to normal.<br>Disconnect the AC and DC switches, and reconnect the AC and DC switches 15 minutes later to restart the inverter.<br>If the fault still exists, contact SUNGROW. |
| 021-022 | Device anomaly | Wait for the inverter to return to normal.<br>Disconnect the AC and DC switches, and reconnect the AC and DC switches 15 minutes later to restart the inverter.<br>If the fault still exists, contact SUNGROW. |
| 024-025<br>030-034 | Device anomaly | Wait for the inverter to return to normal.<br>Disconnect the AC and DC switches, and reconnect the AC and DC switches 15 minutes later to restart the inverter.<br>If the fault still exists, contact SUNGROW. |

| Fault code | Description | Check method |
|---|---|---|
| 036 | Temperature anomaly, The temperature of the power module is excessively high and out of the safe range. | 1. Check whether the inverter is directly exposed to sunlight. If so, take some shading measures.<br>2. Check and clean the air ducts.<br>3. Check whether there is 070 (fan anomaly) alarm via the App or the LCD. If so, replace the fans. |
| 037 | Temperature anomaly, The temperature of the interior of the inverter is excessively high and out of the safe range. | 1. Check whether the inverter is directly exposed to sunlight. If so, take some shading measures.<br>2. Check and clean the air ducts.<br>3. Check whether there is 070 (fan anomaly) alarm via the App or the LCD. If so, replace the fans. |
| 038 | Device anomaly | Wait for the inverter to return to normal.<br>Disconnect the AC and DC switches, and reconnect the AC and DC switches 15 minutes later to restart the inverter.<br>If the fault still exists, contact SUNGROW. |
| 039 | Low system insulation resistance, which is generally caused by poor insulation to ground of the module/ cable or by rainy and damp environment. | Wait for the inverter to return to normal. If the fault occurs repeatedly:<br>1. Check whether the ISO resistance protection value is excessively high via the App or the LCD, and ensure that it complies with the local regulations.<br>2. Check the resistance to ground of the string and DC cable. Take correction measures in case of short circuit or damaged insulation layer.<br>3. If the cable is normal and the fault occurs on rainy days, check it again when the weather turns fine.<br>4. If the fault is not caused by the foregoing reasons and still exists, contact SUNGROW. |

| Fault code | Description | Check method |
|---|---|---|
| 040-042 | Device anomaly | Wait for the inverter to return to normal.<br>Disconnect the AC and DC switches, and reconnect the AC and DC switches 15 minutes later to restart the inverter.<br>If the fault still exists, contact SUNGROW. |
| 043 | Low ambient temperature, the ambient temperature is lower than the temperature at which the inverter can operate normally. | Stop and disconnect the inverter. Restart the inverter when the ambient temperature falls within the operation temperature range. |
| 044-046 | Device anomaly | Wait for the inverter to return to normal.<br>Disconnect the AC and DC switches, and reconnect the AC and DC switches 15 minutes later to restart the inverter.<br>If the fault still exists, contact SUNGROW. |
| 047 | PV input configuration abnormal, PV input mode error | Stop and disconnect the inverter. Reset the input mode of the PV array. |
| 048-050<br>053-056<br>059-060 | Device anomaly | Wait for the inverter to return to normal.<br>Disconnect the AC and DC switches, and reconnect the AC and DC switches 15 minutes later to restart the inverter.<br>If the fault still exists, contact SUNGROW. |
| 070 | Fan alarm | 1. Check whether the fans operate normally and are blocked by sundries. If they are blocked, clear the sundries.<br>2. If a fan does not operate normally, stop and disconnect the inverter to replace the fan. |
| 071 | AC-side SPD alarm | Check the SPD, and replace it if necessary. |
| 072 | DC-side SPD alarm | |
| 076 | Device anomaly | Wait for the inverter to return to normal.<br>Disconnect the AC and DC switches, and reconnect the AC and DC switches 15 minutes later to restart the inverter.<br>If the fault still exists, contact SUNGROW. |

| Fault code | Description | Check method |
|---|---|---|
| 078-081 | PVx abnormal | 1. Check if the xth PV string needs to be connected.<br>If not, ignore the alarm; and<br>If so, check the connection status and make sure it is connected reliably.<br>2. Check if the xth DC fuse is damaged. If so, replace the fuse.<br>3.If the fault is not caused by the foregoing reasons and still exists, contact SUNGROW.<br>*The code 078 to code 081 are corresponding to PV 1 to PV 4 respectively. |
| 087 | Electric arc detection module abnormal | The inverter can operate normally.<br>1. Check whether the related cable connection and terminals are abnormal, and check whether the ambient environment is abnormal. If so, remove the corresponding abnormity.<br>2. If the fault is not caused by the foregoing reasons and still exists, contact SUNGROW. |
| 088 | Electric arc fault | 1. Disconnect the DC inputs and check whether DC cables are damaged, whether the wiring terminals or fuses are loose or in poor contact, and whether component parts are burnt. If so, take corresponding corrective measures.<br>2. After taking corresponding measures in step 1, reconnect the DC inputs. Remove the arc fault through the App or LCD screen so that the inverter will recover to be normal.<br>3. If the fault is not caused by the foregoing reasons and still exists, contact SUNGROW. |
| 089 | Electric arc detection disabled | 1. Enable the AFD function through the App or the LCD screen so that the inverter will recover to be normal.<br>2. If the fault is not caused by the foregoing reasons and still exists, contact SUNGROW. |

| Fault code | Description | Check method |
|---|---|---|
| 105 | Protection self-check failure on grid side | Restart the inverter or clear the fault through the App.<br>If the fault still exists, contact SUNGROW. |
| 106 | Grounding cable fault | 1. Check whether the AC cable is correctly connected.<br>2. Check whether the insulation between the ground cable and the live wire is normal.<br>3. If the fault is not caused by the foregoing reasons and still exists, contact SUNGROW. |
| 116-117 | Device anomaly | Wait for the inverter to return to normal.<br>Disconnect the AC and DC switches, and reconnect the AC and DC switches 15 minutes later to restart the inverter.<br>If the fault still exists, contact SUNGROW. |
| 220~227 | PVx abnormal | 1. Check if the xth PV string needs to be connected.<br>If not, ignore the alarm; and<br>If so, check the connection status and make sure it is connected reliably.<br>2. Check if the xth DC fuse is damaged. If so, replace the fuse.<br>3.If the fault is not caused by the foregoing reasons and still exists, contact SUNGROW.<br>*The code 220 to code 227 are corresponding to PV 5 to PV 12 respectively. |
| 448~471 | String x reverse connection fault | 1. Check whether the corresponding string is of reverse polarity. If so, disconnect the DC switch and adjust the polarity when the solar radiation is low and the string current drops below 0.5A.<br>2. If the fault is not caused by the foregoing reasons and still exists, contact SUNGROW.<br>*The code 448 to code 471 are corresponding to string 1 to string 24 respectively. |

| Fault code | Description | Check method |
|---|---|---|
| 532-547 | String x reverse connection alarm | 1. Check whether the corresponding string is of reverse polarity. If so, disconnect the DC switch and adjust the polarity when the solar radiation is low and the string current drops below 0.5A.<br>2. If the fault is not caused by the foregoing reasons and still exists, contact SUNGROW.<br>*The code 532 to code 547 are corresponding to string 1 to string 16 respectively. |
| 548-563 | String x output current anomaly | 1. Check whether the corresponding module is sheltered. If so, remove the shelter and ensure module cleanness.<br>2. Check the module for abnormal aging.<br>3. If the fault is not caused by the foregoing reasons and still exists, contact SUNGROW.<br>*The code 548 to code 563 are corresponding to string 1 to string 16 respectively. |
| 564-571 | String x reverse connection alarm | 1. Check whether the corresponding string is of reverse polarity. If so, disconnect the DC switch and adjust the polarity when the solar radiation is low and the string current drops below 0.5A.<br>2. If the fault is not caused by the foregoing reasons and still exists, contact SUNGROW.<br>*The code 564 to code 571 are corresponding to string 17 to string 24 respectively. |
| 580-587 | String x output current anomaly | 1. Check whether the corresponding module is sheltered. If so, remove the shelter and ensure module cleanness.<br>2. Check the module for abnormal aging.<br>3. If the fault is not caused by the foregoing reasons and still exists, contact SUNGROW.<br>*The code 580 and 587 are corresponding to string 17 and string 24 respectively. |

## 9.2 Maintenance

**DANGER**

Risk of inverter damage or personal injury due to incorrect service!

- Always keep in mind that the inverter is powered by dual sources: PV strings and utility grid.

Before any service work, observe the following procedure.

- Disconnect the AC circuit breaker and then set the DC load-break switch of the inverter to OFF;
- Wait at least 5 minutes for inner capacitors to discharge completely;
- Verify that there is no voltage or current before pulling any connector.

**CAUTION**

Keep non-related persons away!
A temporary warning sign or barrier must be posted to keep non-related persons away while performing electrical connection and service work.

**NOTICE**

Restart the inverter only after removing the fault that impairs safety performance.
As the inverter contains no component parts that can be maintained, never arbitrarily replace any internal components.
For any maintenance need, please contact SUNGROW. Otherwise, SUNGROW shall not be held liable for any damage caused.

### 9.2.1 Routine Maintenance

| Item | Method | Period |
|---|---|---|
| System clean | Check the temperature and dust of the inverter. Clean the inverter enclosure if necessary.<br>Check if the air inlet and outlet are normal. Clean the air inlet and outlet, if necessary. | Six months to a year (-depend on the dust contents in air.) |
| Fans | Check whether there is fan warning using App.<br>Check whether there is any abnormal noise when the fan is turning.<br>Clean or replace the fans if necessary (see the following section). | Once a year |
| Cable entry | Check whether the cable entry is insufficiently sealed or the gap is excessively large, and reseal the entry when necessary. | Once a year |
| Electrical Connection | Check whether all cable are firmly in place.<br>Check whether a cable is damaged, especially the part contacting the metal enclosure. | Six months to a year |

### 9.2.2 Maintenance Instruction

**Cleaning Air Inlet and Outlet**

A huge amount of heat is generated in the process of running the inverter. The inverter adopts a controlled forced-air cooling method.

In order to maintain good ventilation, please check to make sure the air inlet and outlet are not blocked.

Clean the air inlet and outlet with soft brush or vacuum cleaner if necessary.

### Fan Maintenance

**DANGER**

- **Stop the inverter and disconnect it from all power supplies before maintenance.**
- **Lethal voltage still exists in the inverter. Please wait for at least 5 minutes and then perform maintenance work.**
- **Only qualified electricians can maintain the fans.**

Fans inside the inverter are used to cool the inverter during operation. If the fans do not operate normally, the inverter may not be cooled down and inverter efficiency may decrease. Therefore, it is necessary to clean the dirty fans and replace the broken fans in time.

The operation procedure is as follows:

**step 1** Stop the inverter (see "8.1 Disconnecting the Inverter").

**step 2** Loosen the screw on the sealing plate of the fan module.

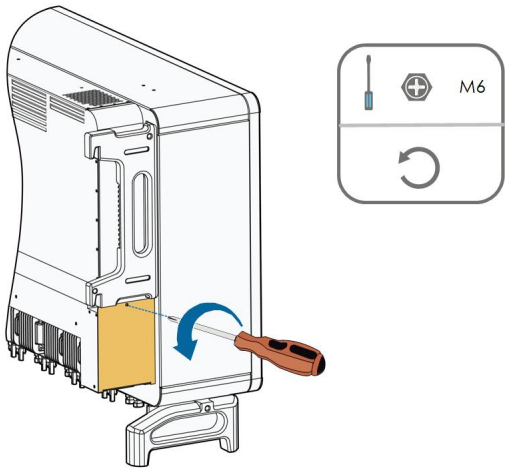


**step 3** Press the hump of the latch hook, unplug the cable connection joint outwards, and loosen the screw on the fan holder.

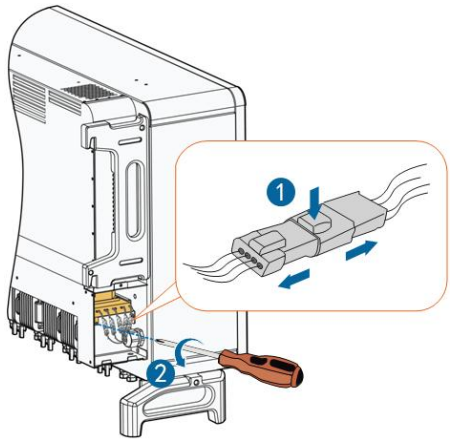


**step 4** Pull out the fan module, clean the fans with soft brush or vacuum cleaner, and replace them when necessary.

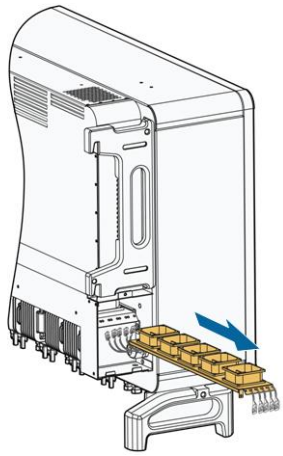

**step 5** Follow the steps above to remove the fan on the other side of the inverter.

**step 6** Reinstall the fan back to the inverter in reverse order and restart the inverter.

**- - End**

# 10 Appendix

## 10.1 Technical Data

| Parameters | SG250HX |
|---|---|
| **Input (DC)** | |
| Max. PV input voltage | 1500V |
| Min.PV input voltage/Startup input voltage | 600V / 600V |
| Nominal input voltage | 1160V |
| MPP voltage range | 600~1500V |
| MPP voltage range for nominal power | 860~1300V |
| No. of independent MPP inputs | 12 |
| Max. number of PV strings per MPPT | 2 |
| Max. PV input current | 26 A * 12 |
| Max. current for input connector | 30A |
| Max.DC Short-circuit current | 50 A * 12 |
| Max. inverter backfeed current to the array | 0A |
| **Output (AC)** | |
| AC output power | 250 kVA @ 30 ℃ / 225 kVA @ 40 ℃/200 KVA @50℃ |
| Max. AC output current | 180.5 A |
| Nominal AC voltage | 3 / PE, 800 V |
| AC voltage range | 680 – 880V |
| Nominal grid frequency/Grid frequency range | 50Hz / 45~55Hz , 60Hz / 55~65Hz |
| Total harmonic distortion (THD) | < 3 % (at nominal power) |
| DC current injection | <0.5%In |
| Power factor | >0.99 |
| Adjustable power factor | 0.8 leading – 0.8 lagging |
| Feed-in phases / Connection phases | 3/3 |

| Parameters | SG250HX |
|---|---|
| **Efficiency** | |
| Max. efficiency / European efficiency | 99.0% / 98.8% |
| **Protection** | |
| DC reverse connection protection | Yes |
| AC short-circuit protection | Yes |
| Leakage current protection | Yes |
| Grid monitoring | Yes |
| Ground fault monitoring | Yes |
| DC switch / AC switch | Yes / No |
| PV string current monitoring | Yes |
| Q at night | Yes |
| An-ti PID and PID recovery function | Yes |
| Overvoltage protection | DC Type II / AC Type II |
| **General Data** | |
| Dimensions (W*H*D) | 1051*660*363 mm |
| Weight | 99kg |
| Isolation method | Transformerless |
| Degree of protection | IP66 |
| Night power consumption | < 2 W |
| Operating ambient temperature range | -30 to 60 ℃ |
| Allowable relative humidity range (non-condensing) | 0 - 100% |
| Cooling method | Smart forced air cooling |
| Max. operating altitude | 5000 m (> 4000 m derating) |
| Display | LED, Bluetooth+APP |
| Communication | RS485 / PLC |
| DC connection type | MC4-Evo2 (Max. 6 mm², optional 10mm² ) |
| AC connection type | OT/DT terminal (Max. 300 mm²) |

| Parameters | SG250HX |
|---|---|
| Compliance | IEC 62109, IEC 61727, IEC 62116, IEC 60068, IEC 61683, VDE-AR-N 4110:2018, VDE-AR-N 4120:2018, IEC 61000-6-2, IEC 61000-6-4, EN 50549, UNE 206007-1:2013, P.O.12.3, UTE C15-712-1:2013 |
| Grid Support | Q at night function, LVRT, HVRT, active & reactive power control and power ramp rate control |

## 10.2 Wring Distance of DI Dry Contact

The maximum wiring distance of DC dry contact must meet the requirements in the table below. The wiring distance L is the total length of all DI signal cables.

$$L = \sum_{k=1}^{n} L_k$$

$L_K$ refers to the cable length between the DI dry contact terminal of the $k^{th}$ inverter and the corresponding terminal of the $(k-1)^{th}$ inverter.

**table 10-1** Correspondence between number of inverters and maximum wiring distance

| Number of inverter | Maximum wiring distance(unit:m) | |
|---|---|---|
| | 16AWG / 1.31mm² | 17AWG / 1.026mm² |
| 1 | 13030 | 10552 |
| 2 | 6515 | 5276 |
| 3 | 4343 | 3517 |
| 4 | 3258 | 2638 |
| 5 | 2606 | 2110 |
| 6 | 2172 | 1759 |
| 7 | 1861 | 1507 |
| 8 | 1629 | 1319 |
| 9 | 1448 | 1172 |
| 10 | 1303 | 1055 |
| 11 | 1185 | 959 |
| 12 | 1086 | 879 |
| 13 | 1002 | 812 |
| 14 | 931 | 754 |
| 15 | 869 | 703 |

| Number of inverter | Maximum wiring distance(unit:m) | |
|---|---|---|
| | 16AWG / 1.31mm² | 17AWG / 1.026mm² |
| 16 | 814 | 660 |
| 17 | 766 | 621 |
| 18 | 724 | 586 |
| 19 | 686 | 555 |
| 20 | 652 | 528 |
| 21 | 620 | 502 |
| 22 | 592 | 480 |
| 23 | 567 | 459 |
| 24 | 543 | 440 |
| 25 | 521 | 422 |

**NOTICE**

**In case the specification of the cable used is not included in the table above, when there is only one inverter, ensure that the line impedance of the input node is less than 300Ω; and when there are multiple inverters connected in the daisy chain, ensure that the impedance is less than 300Ω/number of inverter.**

## 10.3 Quality Assurance

When product faults occur during the warranty period, SUNGROW will provide free service or replace the product with a new one.

**Evidence**

During the warranty period, the customer shall provide the product purchase invoice and date. In addition, the trademark on the product shall be undamaged and legible. Otherwise, SUNGROW has the right to refuse to honor the quality guarantee.

**Conditions**

- After replacement, unqualified products shall be processed by SUNGROW.
- The customer shall give SUNGROW a reasonable period to repair the faulty device.

**Exclusion of Liability**

In the following circumstances, SUNGROW has the right to refuse to honor the quality guarantee:

- The free warranty period for the whole machine/components has expired.
- The device is damaged during transport.

- The device is incorrectly installed, refitted, or used.
- The device operates in harsh environment, as described in this manual.
- The fault or damage is caused by installation, repairs, modification, or disassembly performed by a service provider or personnel not from SUNGROW.
- The fault or damage is caused by the use of non-standard or non-SUNGROW components or software.
- The installation and use range are beyond stipulations of relevant international standards.
- The damage is caused by unexpected natural factors.

For faulty products in any of above cases, if the customer requests maintenance, paid maintenance service may be provided based on the judgment of SUNGROW.

## 10.4 Contact Information

We need the following information to provide you the best assistance:

- Type of the device
- Serial number of the device
- Fault code/name
- Brief description of the problem

| | |
|---|---|
| China<br>Sungrow Power Supply Co., Ltd<br>Hefei<br>+86 551 65327834<br>service@sungrowpower.com | Australia<br>Sungrow Australia Group Pty. Ltd.<br>Sydney<br>+61 2 9922 1522<br>service@sungrowpower.com.au |
| Brazil<br>SungrowDo Brasil<br>Sao Paulo<br>+55 11 2366 1957<br>latam.service@sa.sungrowpower.com | France<br>Sungrow France – Siege Social<br>Paris<br><br>service.france@sungrow.co |
| Germany<br>Sungrow Deutschland GmbH<br>M ü nchen<br>+49 89 324 914 761<br>service.germany@sungrow.co | Greece<br>Service Partner – Survey Digital<br>+30 2106044212<br>service.greece@sungrow.co |

| | |
|---|---|
| India<br>Sungrow (India) Private Limited<br>Gurgaon<br>+9108041201350<br>service@in.sungrowpower.com | Italy<br>Sungrow Italy<br>Milano<br>service.italy@sungrow.co |
| Japan<br>Sungrow Japan K.K.<br>Tokyo<br>+ 81 3 6262 9917<br>japanservice@jp.sungrowpower.com | Korea<br>Sungrow Power Korea Limited<br>Seoul<br>+827077191889<br>service@kr.sungrowpower.com |
| Malaysia<br>Sungrow SEA<br>Selangor Darul Ehsan<br>+6019897 3360<br>service@my.sungrowpower.com | Philippines<br>Sungrow Power Supply Co., Ltd<br>Mandaluyong City<br>+639173022769<br>service@ph.sungrowpower.com |
| Thailand<br>SungrowThailand Co., Ltd.<br>Bangkok<br>+66891246053<br>service@th.sungrowpower.com | Spain<br>Sungrow Ib é rica S.L.U.<br>Navarra<br>service.spain@sungrow.co |
| Romania<br>Service Partner - Elerex<br>+40 241762250<br>service.romania@sungrow.co | Turkey<br>Sungrow Deutschland GmbH Turkey<br>Istanbul Representative Bureau<br>Istanbul<br>+90 2127318883<br>service.turkey@sungrow.co |
| UK<br>Sungrow Power UK Ltd.<br>Milton Keynes<br>+44 (0) 0908 414127<br>service.uk@sungrow.co | U.S.A, Mexico<br>Sungrow USA Corporation<br>PhoenixArizona<br>+1833 7476937<br>techsupport@sungrow-na.com |
| Vietnam<br>Sungrow Vietnam<br>Hanoi<br>+84 918 402 140<br>service@vn.sungrowpower.com | |

SUNGROW

Sungrow Power Supply Co., Ltd.

Add: No.1699 Xiyou Rd.,New & High Technology Industrial Development Zone, 230088,Hefei, P. R. China.
Web: www.sungrowpower.com E-mail: info@sungrow.cn Tel: +86 551 6532 7834 / 6532 7845

Specifications are subject to changes without advance notice.